VENTURA COUNTY
PUBLIC WORKS AGENCY
WATERSHED PROTECTION

TŠUMAŠ (CHUMASH) CREEK IMPROVEMENTS
HUENEME ROAD TO UPSTREAM OF JANE DRIVE
IN THE CITY OF OXNARD

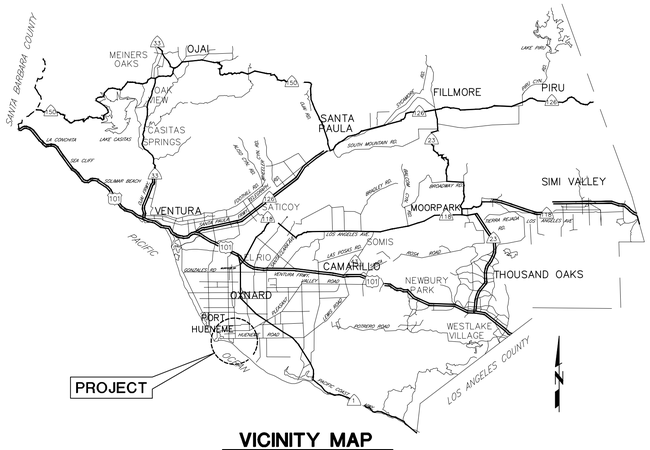

VICINITY MAP

N.T.S.

GENERAL NOTES

1. ELEVATIONS SHOWN ARE IN US FEET, NGVD 1929, SCRP 1980
2. STATIONS SHOWN ON DRAWINGS ARE ALONG CENTERLINE OF CONSTRUCTION.
3. EGL AND HGL ARE BASED ON THE DESIGN DATA HEREON AND ARE SHOWN FOR FUTURE REFERENCE BY THE DISTRICT ONLY.
4. NUMBERS IN ⬡ INDICATE BID ITEMS UNDER WHICH PAYMENT WILL BE MADE.
5. LETTERS AND NUMBERS IN ⊖ INDICATE THE DETAIL CALL-OUT AND SHEET ON WHICH REFERENCE DETAIL IS SHOWN.
6. NUMBERS IN △ REFER TO NOTES ON THE SAME SHEET UNLESS OTHERWISE NOTED.
7. TREES DESIGNATED BY ▨ SHALL BE REMOVED. ALL OTHER TREES SHALL BE PROTECTED IN PLACE UNLESS OTHERWISE NOTED. TREES ARE SHOWN AS KNOWN TO EXIST AT TIME OF SURVEY, IN SEPTEMBER 2009.
8. TOPOGRAPHY AND CROSS SECTIONS FOR THIS PROJECT WERE TAKEN FROM SURVEYS PERFORMED IN SEPTEMBER 2009 AND NOVEMBER 2013.
9. SOIL TEST BORINGS AND CPTS FOR THE PROJECT WERE MADE IN SEPTMEBER 2012, AND THEIR LOCATION IS MARKED BY THE SYMBOL ✥ FOR BORINGS AND ▼ FOR CPTS. SUBSURFACE SOIL INVESTIGATION RESULTS ARE FURNISHED FOR INFORMATION ONLY, IN ACCORDANCE WITH SUBSECTION 2-7 OF THE STANDARD SPECIFICATIONS, AND NO WARRANTY IS MADE THEREFOR.
10. ALL EXISTING IMPROVEMENTS SHALL REMAIN AND SHALL BE PROTECTED IN-PLACE UNLESS OTHERWISE NOTED. ANY DAMAGED IMPROVEMENTS SHALL BE REPLACED IN KIND TO A CONDITION EQUAL TO OR BETTER THAN THAT WHICH EXISTED PRIOR TO CONSTRUCTION.
11. SYMBOL △ INDICATES THE LOCATION OF THE HORIZONTAL AND VERTICAL CONTROL POINTS.
12. UTILITIES ARE SHOWN AS KNOWN TO EXIST AT TIME OF SURVEY. UTILITIES MAY HAVE BEEN OMITTED, MISPLACED, AND/OR RELOCATED. CONTRACTOR SHALL EXERCISE CARE AND SHALL PROTECT ALL UTILITIES IN-PLACE UNLESS OTHERWISE NOTED.
13. CONTRACTOR SHALL NOTIFY UTILITY OWNERS A MINIMUM OF 48 HOURS PRIOR TO STARTING WORK IN AREAS AFFECTING THEIR FACILITIES:

SOUTHERN CALIFORNIA EDISON POWER	TEL. NO. (805) 654-7215	SKYLAR GRAYBILL
SOUTHERN CALIFORNIA EDISON STREET LIGHTS	TEL. NO. (805) 654-7323	JIM OSBORNE
CITY OF OXNARD PUBLIC WORKS WATER/SAN	TEL. NO. (805) 385-8052	ASITHA WITHANAGE
CITY OF OXNARD PUBLIC WORKS TRAFFIC	TEL. NO. (805) 200-5258	PETE WESSEL
SOUTHERN CALIFORNIA GAS COMPANY	TEL. NO. (818) 701-2539	MARICRUZ DE LA TORRE
CITY OF PORT HUENEME	TEL. NO. (805) 986-6658	CHARLES CABLE
FRONTIER CABLE	TEL. NO. (805) 443-7550	DALE QUOLAS

UNDERGROUND SERVICE ALERT

1-800-422-4133
CALL USA/SC
FOR UNDERGROUND LOCATION
2 WORKING DAYS BEFORE YOU DIG

HYDROLOGY

Q50 (CFS)	Q100 (CFS)
1,311	1480

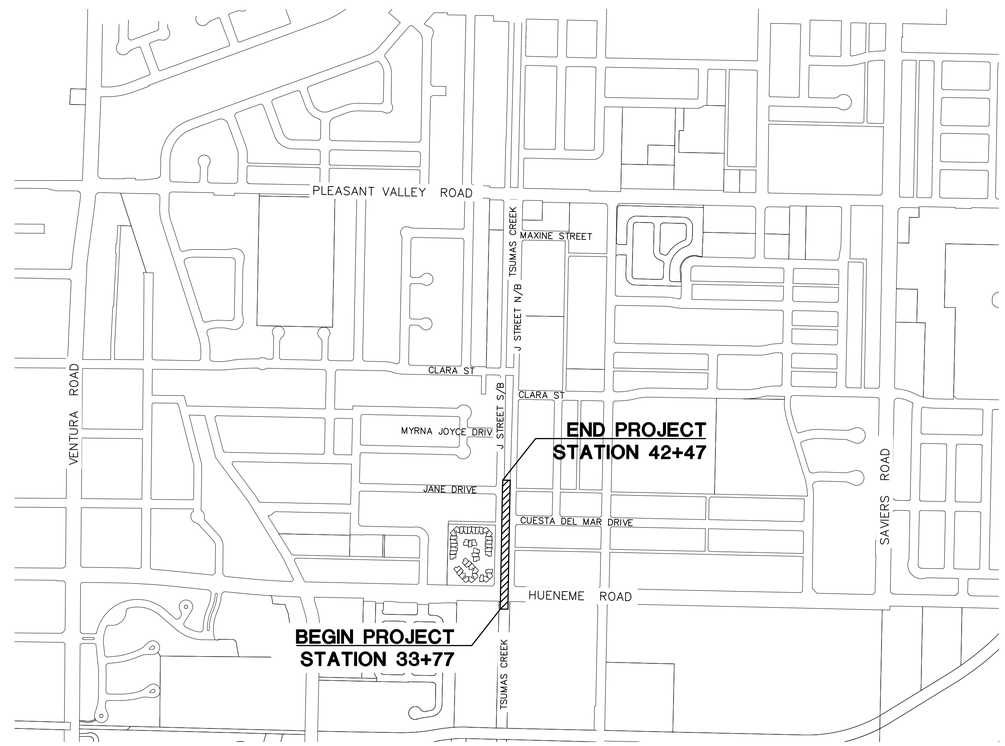

PROJECT SITE PLAN

500 0 500 1000
SCALE OF FEET

REGISTERED PROFESSIONAL ENGINEER
KIRK R. NORMAN
No. 50367
Exp. 6/30/21
CIVIL
STATE OF CALIFORNIA

INDEX TO SHEETS

INDEX OF STANDARD PLANS USED BY REFERENCE

CITY OF OXNARD STANDARD PLATES (COSP)

116	COMMERCIAL & INDUSTRIAL DRIVEWAYS
302	VALVE ANCHOR
303	VALVE BOX INSTALLATION–REPLACED 10-6-14
307	BLOWOFF INSTALLATION
308	COMBINATION AIR-VACUUM VALVE INSTALLATION
313	RELOCATION OF WATER MAIN & FIRE HYDRANT LATERALS CONDITION II
320	THRUST BLOCKING
501	CURB OPENING CATCH BASIN
506	DETAIL OF CATCH BASIN OPENING
507	CATCH BASIN REINFORCEMENT
508	MONOLITHIC CATCH BASIN CONNECTION
509	LOCAL DEPRESSION FOR SIDE OPENING CATCH BASIN
510	CATCH BASIN MANHOLE FRAME & COVER
512	CONCRETE COLLAR
515	MANHOLE NO. 3IN CONCRETE BOX STORM DRAIN
516	CONCRETE RINGS, REDUCER FOR MANHOLE SHAFT
517	MANHOLE FRAME & COVER
525	JUNCTION STRUCTURE NO.5
602	STANDARD TRENCH BACKFILL REQUIREMENT

STANDARD PLANS FOR PUBLIC WORKS CONSTRUCTION (SPPWC)

600-3	CHAINLINK FENCE AND GATES
610-3	REINFORCED RETAINING WALL TYPE 1
615-4	REINFORCED RETAINING WALL TYPE 6
617-3	REINFORCED RETAINING WALL DETAILS

REFERENCE DOCUMENTS

VENTURA COUNTY WATERSHED PROTECTION DRAWINGS
Y-2-0008, Y-2-0150, Y-2-3705

REDWOOD TRUNK SEWER
DRAWING NOS.
G-4, C-1, C-2, C-3
C-11, C-45, C-71, C-72

GAS 2002
DRAWING NOS::
VCO 1482-1

SOUTHERN CALIFORNIA EDISON
CONSTRUCTION MAP 103+00
ORMOND BEACH TO PORT HUENEME
DRAWING NOS:
5107969-8, SHEET M

CITY OF OXNARD
STORM ATLAS
DRAWING NOS: M-34

ADELPHIA – OXNARD MUGU
NODE: 749-009

VERIZON
WIRE CENTER
0749 MUGU
DRAWING NO:
F1101B

PLOT DATE: 8/26/20

SAVE DATE: 8/20/20 125936 K:\PROJECTS\ZONE2\TSUMAS(CHUMASH)CREEK\82323_TSUMAS_CREEK_HUENEME_RD_JANE_DR\DESIGN\DESIGNDRAWINGS\FINAL_PLANS\J STREET 2 – SHT 1.DWG

	REVISION	DESCRIPTION	APP.	DATE
D				
C				
B				
A				
△				

CITY OF OXNARD CALIFORNIA — PUBLIC WORKS
CAPITAL PROJECTS MANAGEMENT DIVISION

APPROVED:
CITY ENGINEER, R.C.E. EXP. EXP_DATE — Date

WATERSHED DEPUTY DIRECTOR — DATE
WATERSHED DIRECTOR — DATE
AGENCY DIRECTOR — DATE

VENTURA COUNTY
PUBLIC WORKS AGENCY
WATERSHED PROTECTION

SPEC. NO. WP21-01
PROJ. NO. 82323

TŠUMAŠ (CHUMASH) CREEK IMPROVEMENTS
HUENEME ROAD TO UPSTREAM OF JANE DRIVE
GENERAL PLAN

SHEET 1 OF 30
DRAWING SET NO. WP-2-386

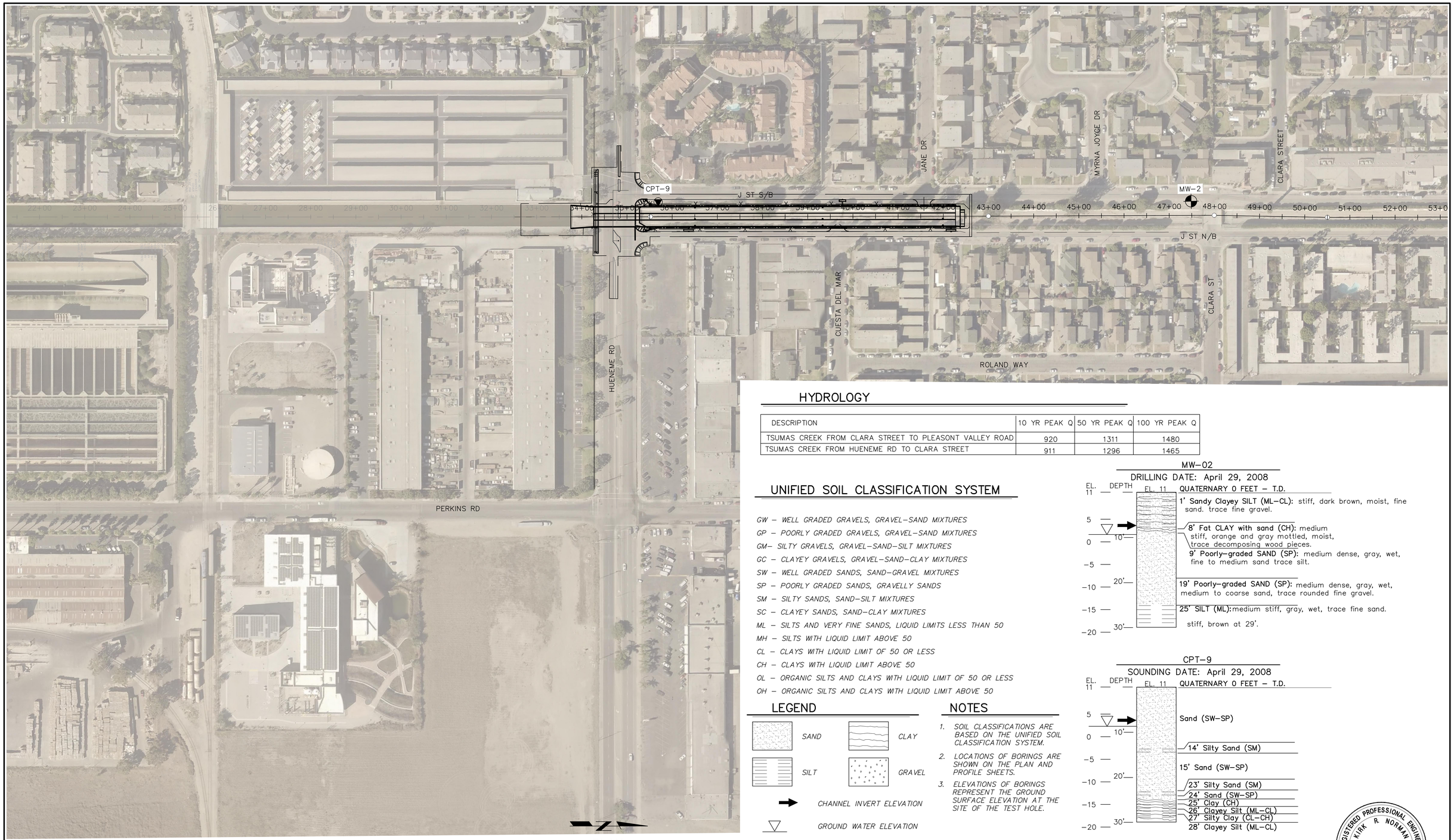

PLAN

60 0 60 120

SCALE OF FEET

HYDROLOGY

DESCRIPTION	10 YR PEAK Q	50 YR PEAK Q	100 YR PEAK Q
TSUMAS CREEK FROM CLARA STREET TO PLEASONT VALLEY ROAD	920	1311	1480
TSUMAS CREEK FROM HUENEME RD TO CLARA STREET	911	1296	1465

UNIFIED SOIL CLASSIFICATION SYSTEM

GW – WELL GRADED GRAVELS, GRAVEL–SAND MIXTURES
GP – POORLY GRADED GRAVELS, GRAVEL–SAND MIXTURES
GM– SILTY GRAVELS, GRAVEL–SAND–SILT MIXTURES
GC – CLAYEY GRAVELS, GRAVEL–SAND–CLAY MIXTURES
SW – WELL GRADED SANDS, SAND–GRAVEL MIXTURES
SP – POORLY GRADED SANDS, GRAVELLY SANDS
SM – SILTY SANDS, SAND–SILT MIXTURES
SC – CLAYEY SANDS, SAND–CLAY MIXTURES
ML – SILTS AND VERY FINE SANDS, LIQUID LIMITS LESS THAN 50
MH – SILTS WITH LIQUID LIMIT ABOVE 50
CL – CLAYS WITH LIQUID LIMIT OF 50 OR LESS
CH – CLAYS WITH LIQUID LIMIT ABOVE 50
OL – ORGANIC SILTS AND CLAYS WITH LIQUID LIMIT OF 50 OR LESS
OH – ORGANIC SILTS AND CLAYS WITH LIQUID LIMIT ABOVE 50

LEGEND

SAND
CLAY
SILT
GRAVEL
CHANNEL INVERT ELEVATION
GROUND WATER ELEVATION
WATER SEEPAGE

NOTES

1. *SOIL CLASSIFICATIONS ARE BASED ON THE UNIFIED SOIL CLASSIFICATION SYSTEM.*
2. *LOCATIONS OF BORINGS ARE SHOWN ON THE PLAN AND PROFILE SHEETS.*
3. *ELEVATIONS OF BORINGS REPRESENT THE GROUND SURFACE ELEVATION AT THE SITE OF THE TEST HOLE.*

MW–02

DRILLING DATE: April 29, 2008

EL. 11 QUATERNARY 0 FEET – T.D.

- 1' Sandy Clayey SILT (ML–CL): stiff, dark brown, moist, fine sand. trace fine gravel.
- 8' Fat CLAY with sand (CH): medium stiff, orange and gray mottled, moist, trace decomposing wood pieces.
- 9' Poorly–graded SAND (SP): medium dense, gray, wet, fine to medium sand trace silt.
- 19' Poorly–graded SAND (SP): medium dense, gray, wet, medium to coarse sand, trace rounded fine gravel.
- 25' SILT (ML): medium stiff, gray, wet, trace fine sand. stiff, brown at 29'.

CPT–9

SOUNDING DATE: April 29, 2008

EL. 11 QUATERNARY 0 FEET – T.D.

- Sand (SW–SP)
- 14' Silty Sand (SM)
- 15' Sand (SW–SP)
- 23' Silty Sand (SM)
- 24' Sand (SW–SP)
- 25' Clay (CH)
- 26' Clayey Silt (ML–CL)
- 27' Silty Clay (CL–CH)
- 28' Clayey Silt (ML–CL)

REGISTERED PROFESSIONAL ENGINEER KIRK R. NORMAN No. 50367 Exp. 6/30/21 CIVIL STATE OF CALIFORNIA

PLOT DATE: 8/26/20

SAVE DATE: 8/11/20 DOKTOROV, NATALIYA K:\PROJECTS\ZONE2\TSUMAS(CHUMASH)CREEK\82323_TSUMAS_CREEK_HUENEME_RD_JANE_DR\DESIGN\DESIGNDRAWINGS\FINAL_PLANS\2_SITE_MAP - HY_CONTROL AND SOIL BORINGS.DWG

	REVISION	DESCRIPTION	APP.	DATE
D				
C				
B				
A				

J MUELLER DESIGNED
JM / ND DRAWN
K NORMAN CHECKED

WATERSHED PROJECT MANAGER 8/26//2020 DATE
WATERSHED DEPUTY DIRECTOR DATE
WATERSHED DIRECTOR DATE

VENTURA COUNTY PUBLIC WORKS AGENCY WATERSHED PROTECTION

SPEC. NO. WP21–01
PROJ. NO. 82323

TŠUMAŠ (CHUMASH) CREEK IMPROVEMENTS HUENEME ROAD TO UPSTREAM OF JANE DRIVE

SITE MAP AND SOIL BORINGS

SHEET 2 OF 30
DRAWING SET NO. WP–2–386

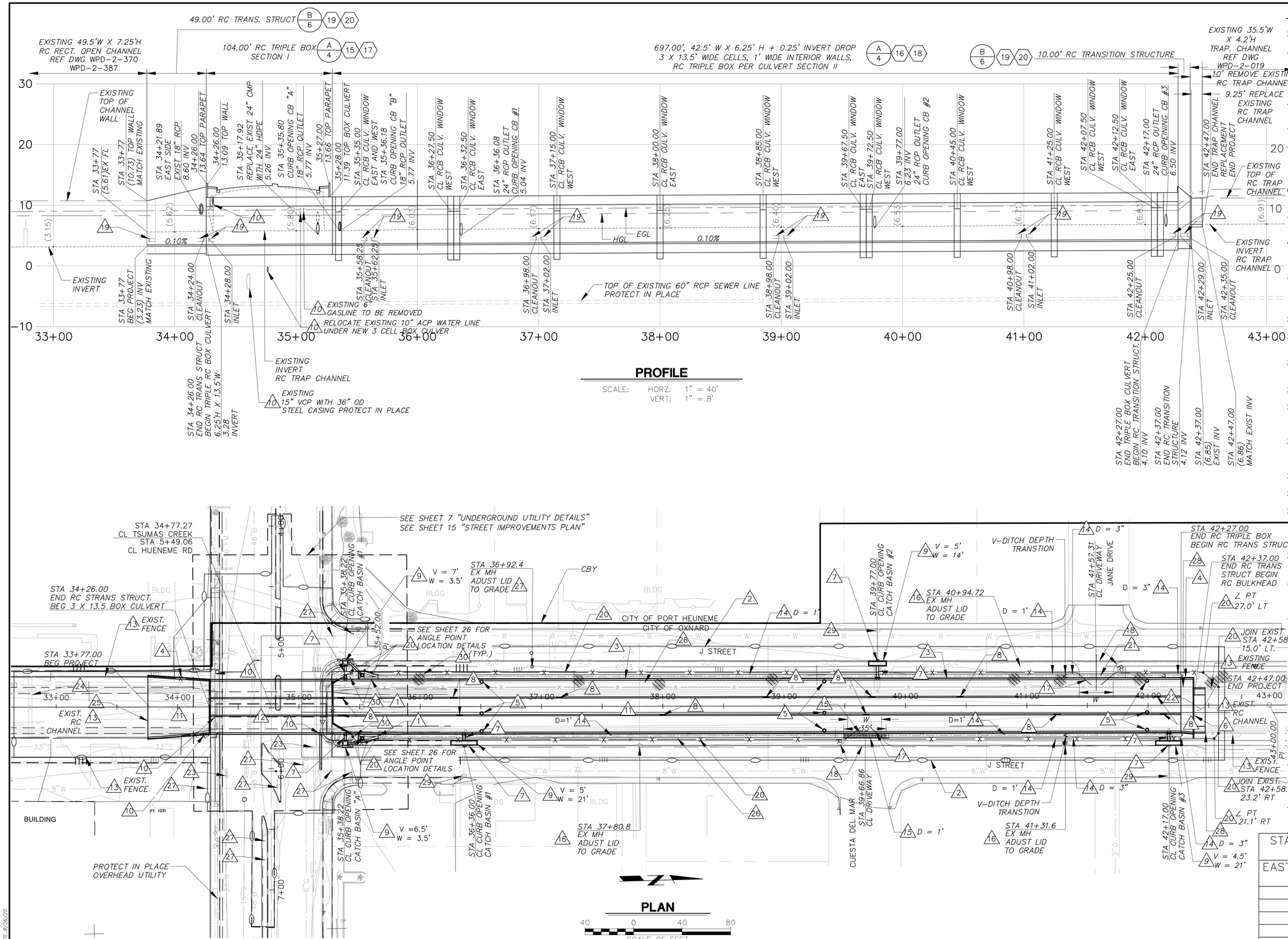

NOTES:

1. INSTALL DROP INLET PER DETAIL (K/8) (37)
2. TEMPORARY WORK AREA LIMITS SHALL BE MARKED AND ALL EQUIPMENT SHALL BE OPERATED WITHIN THE TEMPORARY WORK AREA LIMITS. TEMPORARY WORK AREA SUBJECT TO CHANGE BASED ON STAGE OF CONSTRUCTION. SECURE WITH TEMPORARY FENCING. (8) (9)
3. CONSTRUCT RC TRIPLE BOX PER (A/4) (15) (16) (17) (18)
4. CONSTRUCT RC TRANSITION STRUCTURE PER (B/6) (19) (20)
5. CONSTRUCT MANHOLE PER CITY OF OXNARD STANDARD PLAN(COSP) PLATE #515 WITH LADDER PER DETAIL (C/9) (25) (26)
6. CONSTRUCT RC BULKHEAD PER (D/8) (27)
7. SEE SHEET 10 FOR SIDE DRAIN DETAILS
8. INSTALL 5' WIDE CULVERT WINDOW PER DETAIL (E/5) (21) AND TABLE HEREON
9. INSTALL CURB OPENING CATCH BASIN PER CITY OF OXNARD STANDARD PLAN PLATE #501, W AND V PER PLAN. (27) (28) (29)
10. SEE SHEET 7 FOR UTILITY RELOCATION DETAILS.
11. REMOVE AND DISPOSE OF EXISTING CONCRETE TRAP CHANNEL. (6)
12. REMOVE AND DISPOSE OF EXISTING 3 X 4' X 10' TRIPLE BOX CULVERT, W = 32'. (6)
13. PROTECT IN PLACE PER PLAN.
14. CONSTRUCT EARTHEN V-DITCH, D PER PLAN, PER (F/9) (14)
15. CONSTRUCT CONCRETE V-DITCH WITH GRATE PER (H/9) (30) (69)
16. ADJUST EXISTING SEWER MANHOLE LID TO GRADE. (7)
17. INSTALL 32' WIDE DOUBLE LEAF GATE PER (00/12) (41)
18. CONSTRUCT MODIFIED COMMERCIAL CONCRETE DRIVEWAY PER CITY OF OXNARD STANDARD PLATE 116 AND PER PLAN, R = 7.5', W = 28'. (39)
19. INSTALL SUBDRAIN BOTH SIDES (TYP) PER DETAIL (L/11) (22)
20. INSTALL CHAINLINK FENCE PER DETAILS ON SHEET 12 OR AS OTHERWISE SPECIFIED. (40)
21. CONSTRUCT DRIVEWAY SWALE CROSSING PER (M/8) (39)
22. REMOVE AND RECONSTRUCT EXISTING CONCRETE TRAP CHANNEL PER PLAN AND PER SECTION C-C OF DETAIL (D/8) (6) (7)
23. ADJUST EXISTING SEWER MANHOLE LID TO FINISHED SURFACE. (7)
24. REMOVE EXISTING RC COFFERDAM AT END OF PROJECT. (74)
25. EXISTING BULKHEAD TO BE REMOVED. (6)
26. EXISTING TREES, SHRUBS AND OLEANDER TO BE REMOVED. (6)
27. ADJUST EXISTING UTILITY COVER TO FINISHED SURFACE. (7)
28. REMOVE AND DISPOSE OF INTERFERING SECTION OF EXISTING FENCE PER PLAN. (6)
29. INSTALL FULL CAPTURE TRASH EXCLUDERS INTO EXISTING CATCH BASIN. (68)
30. DIRT SWALE, GRADE TO DRAIN TO DROP INLET DEPRESSION (14)

STATIONS @ CENTERLINE OF WINDOW OPENING	
EAST INTERIOR WALL	WEST INTERIOR WALL
35+50	35+50
36+32.5	36+27.5
38+00	37+15
39+67.5	38+85
41+25	40+45
42+12.50	42+07.50

REGISTERED PROFESSIONAL ENGINEER KIRK R. NORMAN No. 50367 Exp. 6/30/21 CIVIL STATE OF CALIFORNIA

PLOT DATE: 8/26/20

SAVE DATE: 8/26/20 DOKTOROV, NATALIYA K:\PROJECTS\ZONE2\TSUMAS(CHUMASH)CREEK\82323_TSUMAS_CREEK_HUENEME_RD_JANE_DR\DESIGN\DESIGNDRAWINGS\FINAL_PLANS\PLAN_AND_PROFILE.DWG

D			
C			
B			
A			
△	REVISION DESCRIPTION	APP.	DATE

J MUELLER — DESIGNED
JM / ND — DRAWN
K NORMAN — CHECKED

Kirk R. Norman 8/26/2020 — WATERSHED PROJECT MANAGER — DATE
WATERSHED DEPUTY DIRECTOR — DATE
WATERSHED DIRECTOR — DATE

VENTURA COUNTY PUBLIC WORKS AGENCY WATERSHED PROTECTION

SPEC. NO. WP21-01
PROJ. NO. 82323

TŠUMAŠ (CHUMASH) CREEK IMPROVEMENTS HUENEME ROAD TO UPSTREAM OF JANE DRIVE

PLAN AND PROFILE

SHEET 3 OF 30
DRAWING SET NO. WP-2-386

LEGEND:

STRUCTURAL NOTE

STRUCTURAL NOTES:

1. CONCRETE CONSTRUCTION SHALL CONFORM TO STANDARD SPECIFICATIONS AND PROJECT SPECIAL PROVISIONS.
2. DIMENSIONS FROM FACE OF CONCRETE TO REINFORCING BARS ARE TO THE NEAREST EDGE OF THE BAR AND SHALL BE THREE INCHES (3" CLEAR) UNLESS OTHERWISE SHOWN.
3. THE RC BOX CONDUIT DIMENSIONS SHALL BE MEASURED IN A HORIZONTAL AND VERTICAL DIRECTION ABOUT THE CENTERLINE OF THE STRUCTURE. OFFSET DIMENSIONS SHALL BE AT RIGHT ANGLES FROM THE CENTERLINE.
4. REINFORCING DETAILS SHALL CONFORM TO THE LATEST EDITION OF ACI 318.
5. TRANSVERSE CONSTRUCTION JOINTS SHALL BE PLACED AS SHOWN. KEYWAYS (IN BOTH SLABS AND WALLS) SHALL BE PLACED AT THE END OF EACH POUR,SPACING SHALL NOT EXCEED 50 FEET NOR BE LESS THAN 10 FEET MEASURE ALONG THE CENTERLINE OF CONSTRUCTION.
6. PROVIDE A 1 ½ INCH WIDE BY ¾ INCH DEEP TRIANGULAR FORMED GROOVE IN THE INSIDE FACE OF THE WALLS, THE BOTTOM OF THE TOP SLAB AND THE TOP OF THE BOTTOM SLAB AT THE TRANSVERSE CONSTRUCTION JOINT.
7. LONGITUDINAL REINFORCING BARS SHALL BE CONTINUOUS AND EXTEND THROUGH ALL CONSTRUCTION JOINTS, UNLESS OTHERWISE SHOWN.
8. AT THE BEGINNING AND END OF ALL POURS, A CURTAIN OF REINFORCEMENT COMPOSED OF B, B_1, C, C_1, D, F, G, G_1 AND H BARS SHALL BE PLACED THREE INCHES FROM THE TRANSVERSE CONSTRUCTION JOINT
9. TWO LONGITUDINAL BARS SHALL BE PLACED AT EACH CORNER LOCATION AS SHOWN ON THE DETAIL. THE REMAINING LONGITUDINAL BARS SHALL BE EQUALLY SPACED BETWEEN THE CORNER BARS WITH A MAXIMUM SPACING OF 18 INCHES IN EACH FACE OF THE SLABS AND WALLS, AND NEED NOT CORRESPOND TO THE NUMBER OR LOCATION SHOWN ON THE DETAIL. SEE THE TABLE FOR LONGITUDINAL BAR TOTALS.
10. TYPE 'E' JOINT SEALANT SHALL BE INSTALLED IN 1 ½ INCH WIDE BY ¾ INCH DEEP FORMED GROOVE IN THE TOP OF THE TOP SLAB. SAND BLAST THE SIDES OF THE GROOVE AND PROVIDE A NON-BONDING AGENT IN THE BOTTOM OF THE GROOVE BEFORE INSTALLATION OF THE JOINT SEALANT.
11. EXPOSED EDGES OF CONCRETE MEMBERS SHALL BE ROUNDED OR BEVELED.
12. CONSTRUCTION JOINTS SHALL HAVE A 6" PVC WATERSTOP, AS MANUFACTURED BY "SIKA / GREENSTREAK" (MODEL NO. 783 - FLAT RIBBED) OR AN APPROVED EQUAL. THE WATERSTOP SHALL BE TIED TO THE OUTSIDE OF THE REINFORCING STEEL AT THE TOP AND BOTTOM WITH ONE PIECE OF WIRE AT APPROXIMATELY 1'-0" SPACING, PUNCHING SHALL NOT BE ALLOWED. THE WATERSTOP SHALL BE CONTINUOUS FOR EACH WALL SECTION.
13. ALL LAP SPLICES SHALL CONFORM TO THE LATEST EDITION OF ACI 318. LONGITUDINAL STEEL SHALL BE LAPPED 24 BAR DIAMETERS AT SPLICES. TRANSVERSE STEEL SHALL BE LAPPED USING THE "LAP SCHEDULE" TABLE ON SHEET 5.
14. FOR ADDITIONAL REINFORCING AROUND WINDOW OPENINGS SEE "RCB CULVERT WINDOW DETAIL" ON SHEET 5.
15. TRANSVERSE CONSTRUCTION JOINTS SHALL NOT BE PLACED WITHIN 30 INCHES OF MANHOLE OR JUNCTION STRUCTURE OPENINGS, OR SIDE INLETS UNLESS OTHERWISE SHOWN. JOINTS IN WALLS AND SLABS SHALL BE IN THE SAME PLANE, NO STAGGERING OF JOINTS WILL BE PERMITTED. ALL TRANSVERSE CONSTRUCTION JOINTS SHALL BE NORMAL OR RADIAL TO THE CENTERLINE CONSTRUCTION UNLESS OTHERWISE SHOWN.

REINFORCING STEEL NOTES:

1. REINFORCING STEEL CONSTRUCTION SHALL CONFORM TO STANDARD SPECIFICATIONS AND PROJECT SPECIAL PROVISIONS.

DESIGN CRITERIA:

1. DESIGN CODES AND REFERENCES:
   - UNITED SATES ARMY CORPS OF ENGINEERS (USACE) EM 2104
   - ACI 318-14
   - AASHTO LRFD 8TH BDS (w/ CALTRANS AMMENDMENTS)
2. LIVE LOADING:
   - SECTION 1:
   - AASHTO HIGHWAY (PARALLEL AND PERPENDICULAR)
     - DESIGN TRUCK, DESIGN TANDEM, AND DESIGN LANE
   - CALTRANS AMMENDMENTS:
     - PERMIT TRUCK
   - SECTION 2:
   - AASHTO MAINTENANCE ACCESS (PARALLEL AND PERPENDICULAR)
     - HS15-44
3. SOIL DESIGN PARAMETERS:
   - ALLOWABLE SOIL BEARING = 1,500 psf
   - MODULUS OF SUBGRADE REACTION = 175 pci
4. LATERAL SOIL PRESSURE:
   - AT-REST (Drained)
   - AT-REST (Undrained) = 60 pcf
   - WEIGHT = 90 pcf
5. SEISMIC DESIGN DATA: = 130 pcf
   - OBE:
     - DYNAMIC LATERAL LOAD = $22.5H^2$
     - PGA = 0.62g
   - MCE:
     - DYNAMIC LATERAL LOAD = $24H^2$
     - PGA = 0.70g
6. WATER TABLE DESIGN DATA:
   - FREQUENT FLOOD:
     - WATER TABLE (Above Invert ℄) = 4.5 ft
   - INFREQUENT FLOOD:
     - WATER TABLE (Below FS) = 0 ft

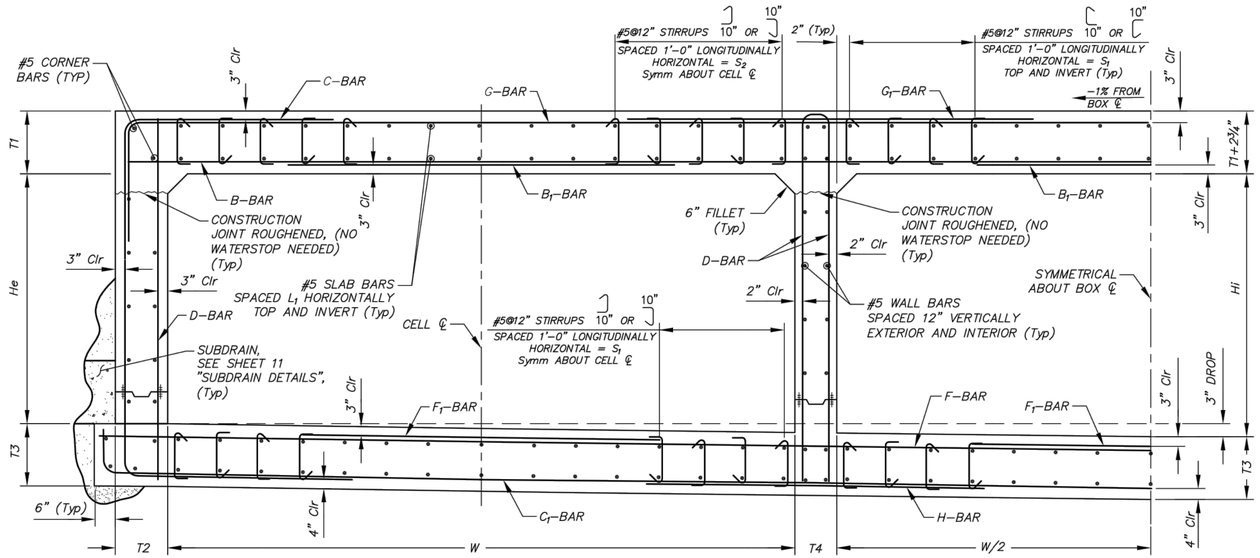

RC TRIPLE BOX CULVERT - TYPICAL SECTION (A)

NOT TO SCALE

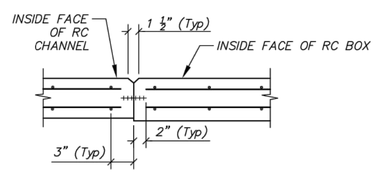

WALLS AND BOTTOM SLAB JOINING RC OPEN CHANNEL

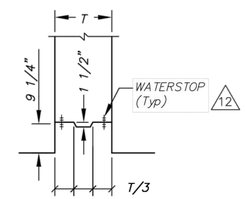

CONSTRUCTION JOINT DETAIL

NOT TO SCALE

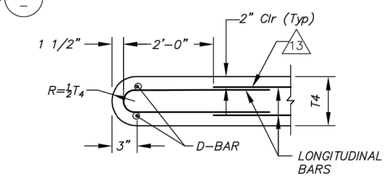

INTERNAL WALL END DETAIL

NOT TO SCALE

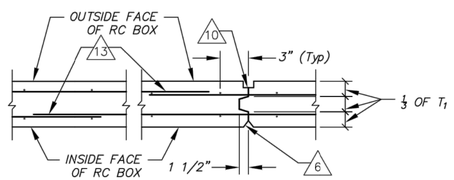

TOP SLAB

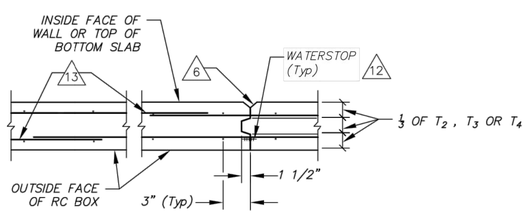

WALLS AND BOTTOM SLAB

TRANSVERSE CONSTRUCTION JOINT DETAILS

NOT TO SCALE

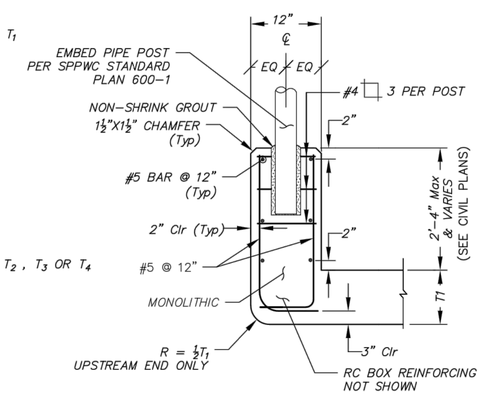

PARAPET - HEADWALL DETAIL 1

NOT TO SCALE

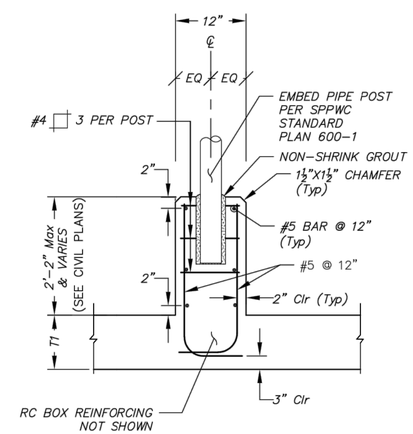

PARAPET - HEADWALL DETAIL 2

NOT TO SCALE

RC TRIPLE BOX CULVERT TABLE

SECTION		1	2
LIVE LOAD		HL-93 & P15	HS15-44
BEGIN STATION		34+26.00	35+42.00
END STATION		35+42.00	42+27.00
WIDTH	W	13'-6"	13'-6"
He (Exterior Walls)		6'-3"	6'-3"
Hi (℄ Box)		6'-6"	6'-6"
THICKNESS (INCHES)	TOP SLAB T_1	18"	17"
	SIDE WALL T_2	15"	15"
	BOTTOM SLAB T_3	18"	17"
	INTERNAL WALL T_4	12"	12"
B BAR	BAR NO. & SPACING	#6@12	#6@12
	LENGTH	44'-6"	44'-6"
B_1 BAR	BAR NO. & SPACING	#6@12	#5@12
	LENGTH (from ℄ of Interior Cell, Each way)	4'-9"	2'-9"
	LENGTH (from ℄ of Exterior Cell, Each way)	5'-6"	4'-3"
C BAR	BAR NO. & SPACING	#6@12	#6@12
	HORIZONTAL LENGTH (TOP)	4'-0"	4'-0"
	HORIZONTAL LENGTH (INVERT)	2'-6"	2'-6"
	VERTICAL LENGTH	8'-9"	8'-7"
C_1 BAR	BAR NO. & SPACING	#6@12	#6@12
	HORIZONTAL LENGTH	45'-6"	45'-6"
	VERTICAL LENGTH	1'-0"	1'-0"
D BAR	BAR NO. & SPACING	#6@12	#6@12
	LENGTH	8'-9"	8'-7"
F BAR	BAR NO. & SPACING	#7@12	#7@12
	LENGTH	45'-6"	45'-6"
F_1 BAR	BAR NO. & SPACING	–	–
	LENGTH (from ℄ of Interior Cell, Each way)	–	–
	LENGTH (from ℄ of Exterior Cell, Each way)	–	–
G BAR	BAR NO. & SPACING	#6@12	#6@12
	HORIZONTAL LENGTH	44'-6"	44'-6"
	VERTICAL LENGTH	5'-1"	4'-11"
G_1 BAR	BAR NO. & SPACING	#6@12	#6@12
	LENGTH (from wall ℄ into Interior Cell)	3'-0"	3'-0"
	LENGTH (from wall ℄ into Exterior Cell)	3'-0"	3'-0"
H BAR	BAR NO. & SPACING	#6@12	#6@12
	LENGTH (from wall ℄ into Interior Cell)	2'-11"	2'-10"
	LENGTH (from wall ℄ into Exterior Cell)	3'-0"	2'-11"
S_1 STIRRUP SPACING		3'-0"	2'-0"
S_2 STIRRUP SPACING		4'-0"	2'-0"
L_1 Longitudinal Spacing		10"	12"
NUMBER OF #5 LONGITUDINAL BARS	TOP SLAB	114	90
	BOTTOM SLAB	118	92
	SIDE WALLS (EA)	14	14
	INTERNAL WALLS (EA)	14	14
TOTAL #5 LONGITUDINAL BARS		288	238
CONCRETE QUANTITY (CY/LF)		6.2	5.9
STEEL QUANTITY (LBS/LF)		991	858

REGISTERED PROFESSIONAL ENGINEER CYPRIAN STELEA No. 73379 Exp. 12/31/2020 CIVIL STATE OF CALIFORNIA

PLOT DATE: 8/26/20

SAVE DATE: 8/26/20 DOKTOROV, NATALIYA K:\PROJECTS\ZONE2\TSUMAS(CHUMASH)CREEK\82323_TSUMAS_CREEK_HUENEME_RD_JANE_DR\DESIGN\DESIGNDRAWINGS\FINAL_PLANS\STRUCTURAL DETAILS.DWG

SAVE DATE: 7/30/20 CSTELEA H:\PDATA\169808\CADD\STRUC\DLV\169808-RCB-TYPICAL SECTION.DWG

	REVISION	DESCRIPTION	APP.	DATE
D				
C				
B				
A				
△				

A. LOZANO DESIGNED
A. LOZANO DRAWN
C. STELEA CHECKED

WATERSHED PROJECT MANAGER — 8/26/2020 DATE
WATERSHED DEPUTY DIRECTOR — DATE
WATERSHED DIRECTOR — DATE

VENTURA COUNTY PUBLIC WORKS AGENCY WATERSHED PROTECTION

SPEC. NO. WP21-01
PROJ. NO. 82323

TŠUMAŠ (CHUMASH) CREEK IMPROVEMENTS
HUENEME ROAD TO UPSTREAM OF JANE DRIVE
RC TRIPLE BOX CULVERT DETAILS

SHEET 4 OF 27
DRAWING NO. WPD-2-386

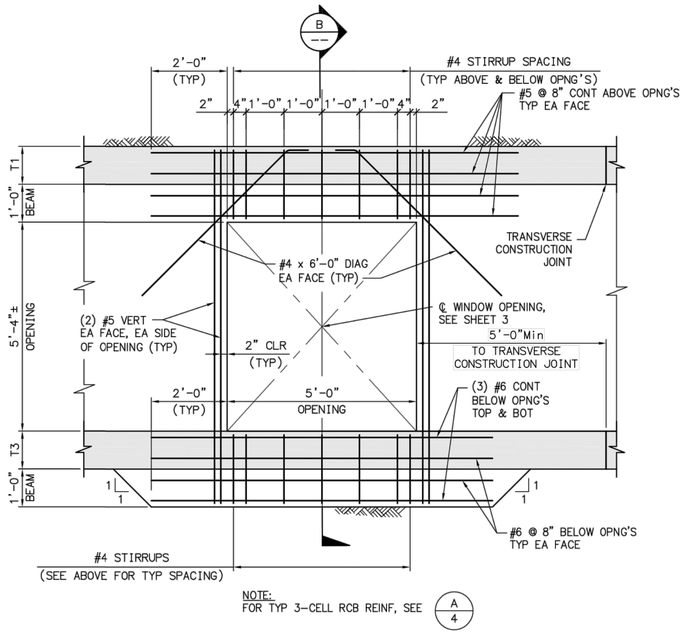

ELEVATION

RCB CULVERT WINDOW DETAIL

NO SCALE

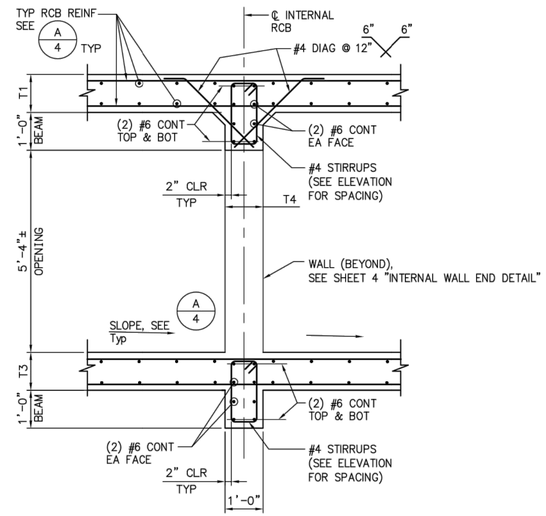

NOTE:
SLOPE CHANGES DIRECTION FOR EAST INTERIOR WALL

SECTION B-B

NO SCALE

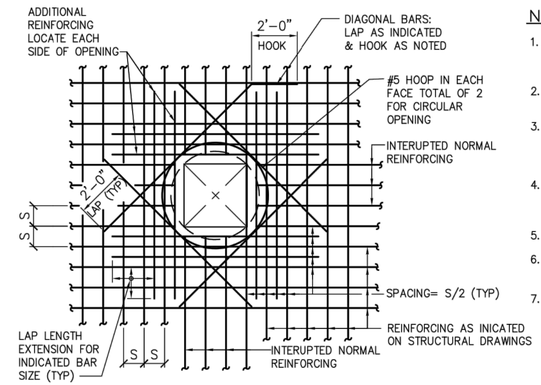

ADDITIONAL REINFORCING AT OPENINGS

NOT TO SCALE

NOTES:

1. NUMBER OF ADDITIONAL REINFORCING BARS EACH SIDE OF OPENING SHALL EQUAL 1/2 THE NUMBER OF INTERRUPTED BARS IN EACH LAYER OF REINFORCING.
2. SIZE OF ADDITIONAL REINFORCING BARS TO EQUAL SIZE OF INTERRUPTED REINFORCING BARS.
3. PROVIDE STANDARD HOOK ON BARS IF LAP LENGTH EXTENSION CANNOT BE OBTAINED OR AT JOINTS OR OTHER OBSTRUCTIONS. PLACE ADDITIONAL BARS IN SAME PLANES AS INTER- RUPTED REINFORCING.
4. UNLESS NOTED OTHERWISE. SIZE OF DIAGONAL BARS SHALL BE THE SIZE OF THE LARGEST NORMAL REINFORCING BAR CUT. LOCATE DIAGONAL IN EACH LAYER OF REINFORCING.
5. PLACE DIAGONAL BARS INSIDE INDICATED REINFORCING.
6. SPECIAL OPENING CONDITIONS SHALL BE AS INDICATED ON THE DRAWINGS OR AS DIRECTED BY THE ENGINEER.
7. ALL REINFORCING TO CLEAR OPENING OR FLANGE COLLARS BY 3".

CONCRETE QUANTITY REDUCTION (CY/WINDOW)	.62
STEEL WEIGHT INCREASE (LB/WINDOW)	237

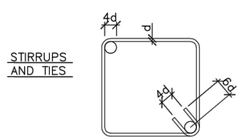

LAP SCHEDULE

f'c = 4,000 psi
Fy = 60,000 psi

BAR SIZE	TOP BARS	OTHER BARS
#5	18"	23"
#6	21"	27"
#7	31"	40"
#8	35"	46"

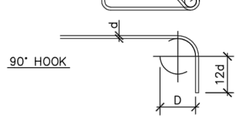

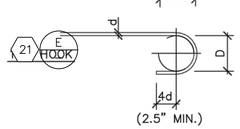

BEND SCHEDULE

BAR SIZES	D
#4 THRU #8	6d

d = DIAMETER OF REINF. BAR

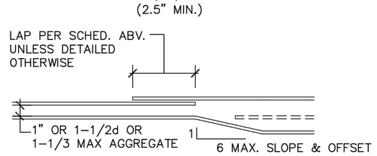

REINFORCEMENT DETAILS

NOT TO SCALE

REGISTERED PROFESSIONAL ENGINEER
STEFAN STELEA
No. 73379
Exp. 12/31/2020
CIVIL
STATE OF CALIFORNIA

PLOT DATE: 8/26/20

SAVE DATE: 8/26/20 DOKTOROV, NATALIYA K:\PROJECTS\ZONE2\TSUMAS(CHUMASH)CREEK\82323_TSUMAS_CREEK_HUENEME_RD_JANE_DR\DESIGN\DESIGNDRAWINGS\FINAL_PLANS\STRUCTURAL DETAILS.DWG
SAVE DATE: 7/28/20 CSTELEA H:\PDATA\169808\CADD\STRUC\DLV\169808-RCB-WINDOW DETAIL.DWG

D			
C			
B			
A			
△	REVISION DESCRIPTION	APP.	DATE

RECOMMENDED: _____ DATE _____
APPROVED: _____ DATE _____
PORT OF HUENEME, OXNARD HARBOR DISTRICT

A. LOZANO — DESIGNED
A. LOZANO — DRAWN
C. STELEA — CHECKED

WATERSHED PROJECT MANAGER — DATE 8/26/2020
WATERSHED DEPUTY DIRECTOR — DATE
WATERSHED DIRECTOR — DATE

VENTURA COUNTY PUBLIC WORKS AGENCY WATERSHED PROTECTION

SPEC. NO. WP21-01
PROJ. NO. 82323

TŠUMAŠ (CHUMASH) CREEK IMPROVEMENTS
HUENEME ROAD TO UPSTREAM OF JANE DRIVE
RCB CULVERT WINDOW DETAILS

SHEET 5 OF 27
DRAWING NO. WPD-2-386

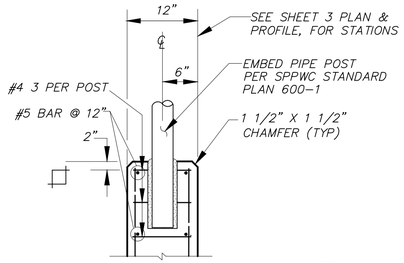

CHAIN LINK FENCE DETAILS (K / –)

NOT TO SCALE

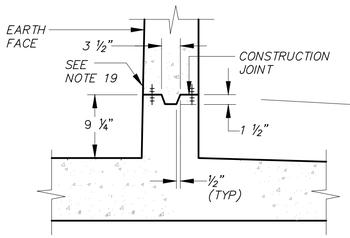

LONGITUDINAL WALL JOINTS

NOT TO SCALE

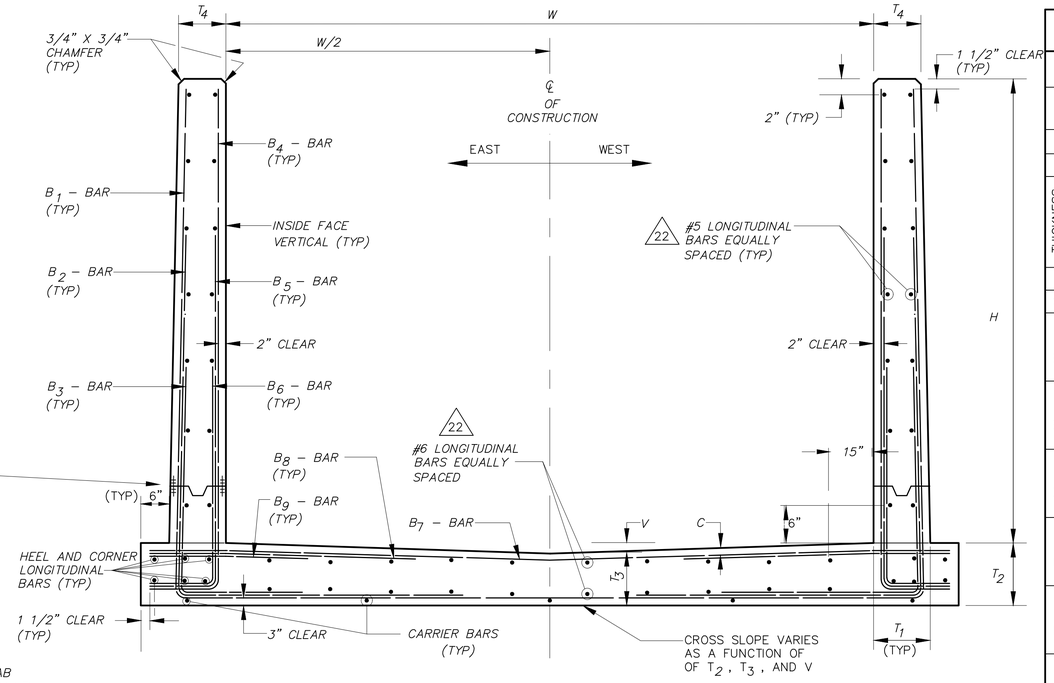

TYPICAL RC TRANSITION STRUCTURE DETAIL (J / – 19 20)

NOT TO SCALE

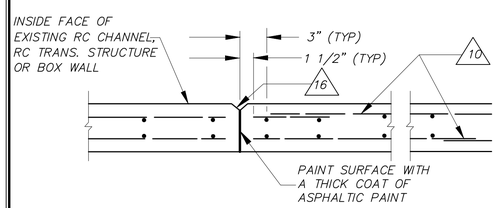

EXISTING RC CHANNEL TO RC TRANSITION STRUCTURE AND BOX TO RC TRANSITION STRUCTURE WALLS

NOT TO SCALE

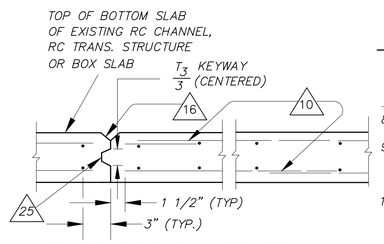

EXISTING RC CHANNEL TO RC TRANSITION STRUCTURE AND BOX TO RC TRANSITION STRUCTURE SLAB

NOT TO SCALE

CONSTRUCTION JOINT DETAILS

NOT TO SCALE

STRUCTURAL NOTES

GENERAL:

1. DIMENSIONS FROM FACE OF CONCRETE TO STEEL ARE TO THE NEAREST EDGE OF BAR AND SHALL BE TWO INCHES UNLESS OTHERWISE SHOWN.
2. CONCRETE DIMENSIONS SHALL BE MEASURED HORIZONTALLY OR VERTICALLY ON THE PROFILE, AND PARALLEL TO OR AT RIGHT ANGLES (OR RADIALLY) TO CENTERLINE OF CHANNEL ON THE PLAN EXCEPT AS OTHERWISE SHOWN.
3. ALL BAR BENDS AND HOOKS SHALL CONFORM TO THE 2014 EDITION OF THE AMERICAN CONCRETE INSTITUTE'S "BUILDING CODE REQUIREMENTS FOR REINFORCED CONCRETE" (ACI 318–14), SECTION 7.3
4. PLACING OF REINFORCEMENT SHALL CONFORM TO THE 2014 EDITION OF THE AMERICAN CONCRETE INSTITUTE'S "BUILDING CODE REQUIREMENTS FOR REINFORCED CONCRETE" (ACI 318–14), SECTION 7.5.
5. TRANSVERSE CONSTRUCTION JOINTS SHALL NOT BE PLACED WITHIN 30 INCHES OF MANHOLE OR JUNCTION STRUCTURE OPENING, OR SIDE INLETS.
6. TRANSVERSE CONSTRUCTION JOINTS IN WALLS AND SLABS SHALL BE IN THE SAME PLANE. NO STAGGERING OF JOINTS WILL BE PERMITTED. TRANSVERSE CONSTRUCTION JOINTS SHALL BE NORMAL OR RADIAL TO THE CENTERLINE OF CONSTRUCTION UNLESS OTHERWISE SHOWN.
7. THE TRANSVERSE REINFORCING STEEL SHALL TERMINATE ONE AND ONE–HALF INCHES FROM THE CONCRETE SURFACES UNLESS OTHERWISE SHOWN ON THE PLANS.

ADDITIONAL NOTES FOR R.C. OPEN CHANNEL SECTIONS:

8. EXPOSED EDGES OF CONCRETE MEMBERS SHALL BE CHAMFERED 3/4" X 3/4".
9. NO SPLICES IN TRANSVERSE STEEL REINFORCEMENT WILL BE PERMITTED OTHER THAN SHOWN IN THE DRAWING WITHOUT APPROVAL OF THE ENGINEER. NO MORE THAN ONE SPLICE SHALL BE PERMITTED IN ANY LONGITUDINAL BAR BETWEEN TRANSVERSE JOINTS. SPLICES SHALL BE STAGGERED.
10. ALL LAP SPLICES SHALL CONFORM TO THE 2014 EDITION OF THE AMERICAN CONCRETE INSTITUTE'S "BUILDING CODE REQUIREMENTS FOR REINFORCED CONCRETE" (ACI 318–14), SECTION 12.15. LONGITUDINAL STEEL SHALL BE LAPPED 24 BAR DIAMETER AT SPLICES. TRANSVERSE STEEL SHALL BE LAPPED USING THE FOLLOWING TABLE:

BAR SIZE	#4	#5	#6	#7	#8	#9	#10	#11	#14	#18
LENGTH OF LAP SPLICE	25"	31"	37"	62"	81"	103"	130"	160"	TENSION LAP SPLICING NOT PERMITTED	

11. LONGITUDINAL STEEL SHALL TERMINATE TWO INCHES FROM TRANSVERSE CONSTRUCTION JOINTS.
12. TRANSVERSE CONSTRUCTION JOINTS SHALL BE SPACED NOT TO EXCEED 50 FEET NOR BE LESS THAN 10 FEET, MEASURED ALONG THE CENTERLINE OF CONSTRUCTION, EXCEPT AS OTHERWISE SHOWN ON THE DRAWINGS.
13. TRANSVERSE CONSTRUCTION JOINTS SHALL BE PLACED AT THE JUNCTION OF RECTANGULAR OPEN CHANNEL SECTIONS WITH CLOSED CONDUIT SECTIONS.
14. THE MAXIMUM SPACING OF BARS IN CURVED SECTIONS SHALL NOT EXCEED THAT SHOWN ON THE TYPICAL SECTIONS, UNLESS OTHERWISE SHOWN ON THE DRAWINGS. STEEL SHALL BE PLACED RADIALLY FROM THE MAXIMUM SPACING.
15. AT THE BEGINNING AND ENDING OR POURS, A COMPLETE CURTAIN OF REINFORCEMENT COMPOSED OF B_1, B_4, AND B_7 BARS SHALL BE PLACED THREE INCHES FROM THE TRANSVERSE CONSTRUCTION JOINT.
16. ALL TRANSVERSE JOINTS SHALL BE PROVIDED WITH 1 1/2" X 3/4" FORMED GROOVE IN THE INSIDE FACE AND TOP OF WALLS AND WITH 3/4" TOOLED JOINT IN THE BOTTOM SLAB. LONGITUDINAL JOINTS SHALL NOT BE CHAMFERED.
17. THE BAR LENGTHS TABULATED IN THE "RC TRANSITION SECTION TABLE" PROVIDED HEREON ARE APPLICABLE AS NOTED AT THE BEGINNING AND ENDING OF EACH TRANSITION SECTION. THE BARS REQUIRING LENGTH ADJUSTMENTS (THE BARS THAT HAVE DIFFERENT BEGINNING AND ENDING LENGTHS) SHALL BE ADJUSTED AS NECESSARY WITHIN EACH TRANSITION SECTION.
18. TRANSVERSE WALL JOINTS SHALL HAVE A 4" POLYVINYL CHLORIDE WATERSTOP (SPLIT RIBBED CENTER BULB TYPE) WHICH SHALL BE CONTECH VINYLSTOP NO. 431S, BURKE VINYLOK WATERSTOP R.S.B. 316–4, OR AN APPROVED EQUAL.
19. CONSTRUCTION JOINTS SHALL HAVE A 6" PVC WATERSTOP, AS MANUFACTURED BY "SIKA / GREENSTREAK" (MODEL NO. 783 – FLAT RIBBED) OR AN APPROVED EQUAL. THE WATERSTOP SHALL BE TIED TO THE OUTSIDE OF THE REINFORCING STEEL AT THE TOP AND BOTTOM WITH ONE PIECE OF WIRE AT APPROXIMATELY 1'–0" SPACING, PUNCHING SHALL NOT BE ALLOWED. THE WATERSTOP SHALL BE CONTINUOUS FOR EACH WALL SECTION.

RC TRANSITION STRUCTURE TABLE

SECTION NUMBER			1		2	
CHANNEL STATION (24)			BEGIN	END	BEGIN	END
			33+77	34+26	42+27	42+37
WIDTH		W	49'–6"	42'–6'	42'–6'	43'–4"
HEIGHT		H	7'–3"	9'–9"	10'–3"	7'–1"
THICKNESS (INCHES)	BASE OF WALL	T_1	15"		15"	
	SLAB AT FACE OF WALL	T_2	16"		16"	
	SLAB AT ℄	T_3	13"		13"	
	TOP OF WALL	T_4	12"		12"	
INVERT DROP		V	3"		3"	
STEEL CLEARANCE INVERT		C	2"		2"	
B_1 BAR	BAR # AND SPACING		5 @ 15"		5 @ 15"	
	HORIZONTAL LENGTH		27'–2"	23'–8"	23'–8"	24'
	VERTICAL LENGTH		8'–2"	10'–8"	11'–2"	8'
B_2 BAR	BAR # AND SPACING		6 @ 12"		6 @ 12"	
	HORIZONTAL LENGTH		14'–8"	13'–6"	13'–6"	12'–11"
	VERTICAL LENGTH		7'–1"	9'–8"	9'–8"	7'
B_3 BAR	BAR # AND SPACING		7 @ 6"		7 @ 6"	
	HORIZONTAL LENGTH		4'–7"	9'	9'	4'–7"
	VERTICAL LENGTH		5'–4"	8'–8"	8'–8"	5'–3"
B_4 BAR	BAR # AND SPACING		5 @ 12"		5 @ 12"	
	HORIZONTAL LENGTH		1'–5"		1'–5"	
	VERTICAL LENGTH		8'–2"	10'–8"	11'–2"	8'
B_5 BAR	BAR # AND SPACING		–		–	
	HORIZONTAL LENGTH		–		–	
	VERTICAL LENGTH		–		–	
B_6 BAR	BAR # AND SPACING		–		–	
	HORIZONTAL LENGTH		–		–	
	VERTICAL LENGTH		–		–	
B_7 BAR	BAR # AND SPACING		6 @ 15"		6 @ 15"	
	HORIZONTAL LENGTH		52'–9"	45'–9"	45'–9"	46'–7"
B_8 BAR	BAR # AND SPACING		–		–	
	HORIZONTAL LENGTH		–		–	
B_9 BAR	BAR # AND SPACING		–		–	
	HORIZONTAL LENGTH		–		–	
LONGITUDINAL BAR SIZE, SPACING AND QUANTITY						
WALLS	BOTH FACES		#5 @ 15"		#5 @ 15"	
	NUMBER OF BARS TOTAL		12	18	18	12
INVERT	TOP/EXPOSED FACE		#5 @ 12"		#5 @ 12"	
	NUMBER OF BARS TOTAL		50	43	43	44
	BOTTOM/UNEXPOSED FACE		#5 @ 12"		#5 @ 12"	
	NUMBER OF BARS TOTAL		50	43	43	44
HEEL AND CORNER	SIZE		#4		#4	
	NUMBER OF BARS TOTAL		6+6		6+6	
#4 CARRIER BARS IN BOTTOM SLAB			17		17	
CONCRETE QUANTITY: AVG CY/LINEAR FT			2.95		2.83	
STEEL QUANTITY: AVG LBS/LINEAR FT			455		467	

DESIGN DATA

LIVE LOAD

HS20–44

DEAD LOAD

WEIGHT OF CONCRETE = 150 pcf
SOIL DENSITY = 120 pcf

LATERAL LOADS

EARTHSIDE = 90 psf (EFP)
WATERSIDE = 40 psf (EFP)

ALLOWABLE STRESSES

f'_c = 4,000 psi
f_c = 1,800 psi
f_s = 24,000 psf
n = 8

SHEAR AND BOND STRESSES PER ACI CODE 318–05

REGISTERED PROFESSIONAL ENGINEER
KIRK R. NORMAN
No. 50367
Exp. 6/30/21
CIVIL
STATE OF CALIFORNIA

20. B_1 BARS MAY BE SPLICED ABOVE THE LONGITUDINAL CONSTRUCTION JOINT. USE LAP SHOWN IN THE TABLE HEREON. THE LONGITUDINAL CONSTRUCTION JOINTS SHALL BE CONTINUOUS.
21. THE LONGITUDINAL CONSTRUCTION JOINTS SHALL BE CONTINUOUS.
22. THE SPACING OF THE LONGITUDINAL BARS IN THE SLAB SHALL BE BASED ON THE DISTANCE BETWEEN THE LONGITUDINAL CORNER BARS NEAREST THE INSIDE FACE OF THE STRUCTURE AND THE NUMBER OF BARS SPECIFIED IN THE TABLE. THE SPACING IN THE WALLS SHALL BE BASED ON THE WALL HEIGHT AND THE NUMBER OF BARS IN THE TABLE.
23. CONTRACTOR SHALL INSTALL ADDITIONAL REINFORCEMENT AT SUBDRAIN INLET AND CLEANOUT END LOCATIONS AND SHALL CUT THE REBARS ON EACH FACE OF THE RC CHANNEL WALL AS SHOWN ON THE "REINFORCEMENT AT SUBDRAIN PIPE" DETAIL ON SHEET 12. THIS REINFORCEMENT SHALL CONSIST OF THE SAME REINFORCEMENT CONFIGURATION AS SHOWN ON THE "REINFORCEMENT AT SUBDRAIN PIPE" DETAIL. CONTRACTOR WILL NOT BE ALLOWED TO POUR CONCRETE AT THE FOOTING OF THE RC CHANNEL WALL UNTIL THE ADDITIONAL REINFORCEMENT HAS BEEN INSTALLED AND INSPECTED BY THE DISTRICT'S INSPECTOR.
24. ADJUST LENGTHS, WIDTHS, AND HEIGHTS THROUGHOUT SECTION. BEGINNING AND ENDING STATION AND LENGTHS GIVEN IN THE TABLE HERE ON.
25. SAWCUT KEY WAY INTO EXISTING INVERT BETWEEN THE EXISTING CHANNEL AND THE NEW CHANNEL IF ONE WAS NOT PLACED IN THE EXISTING WHEN IT WAS BUILT.

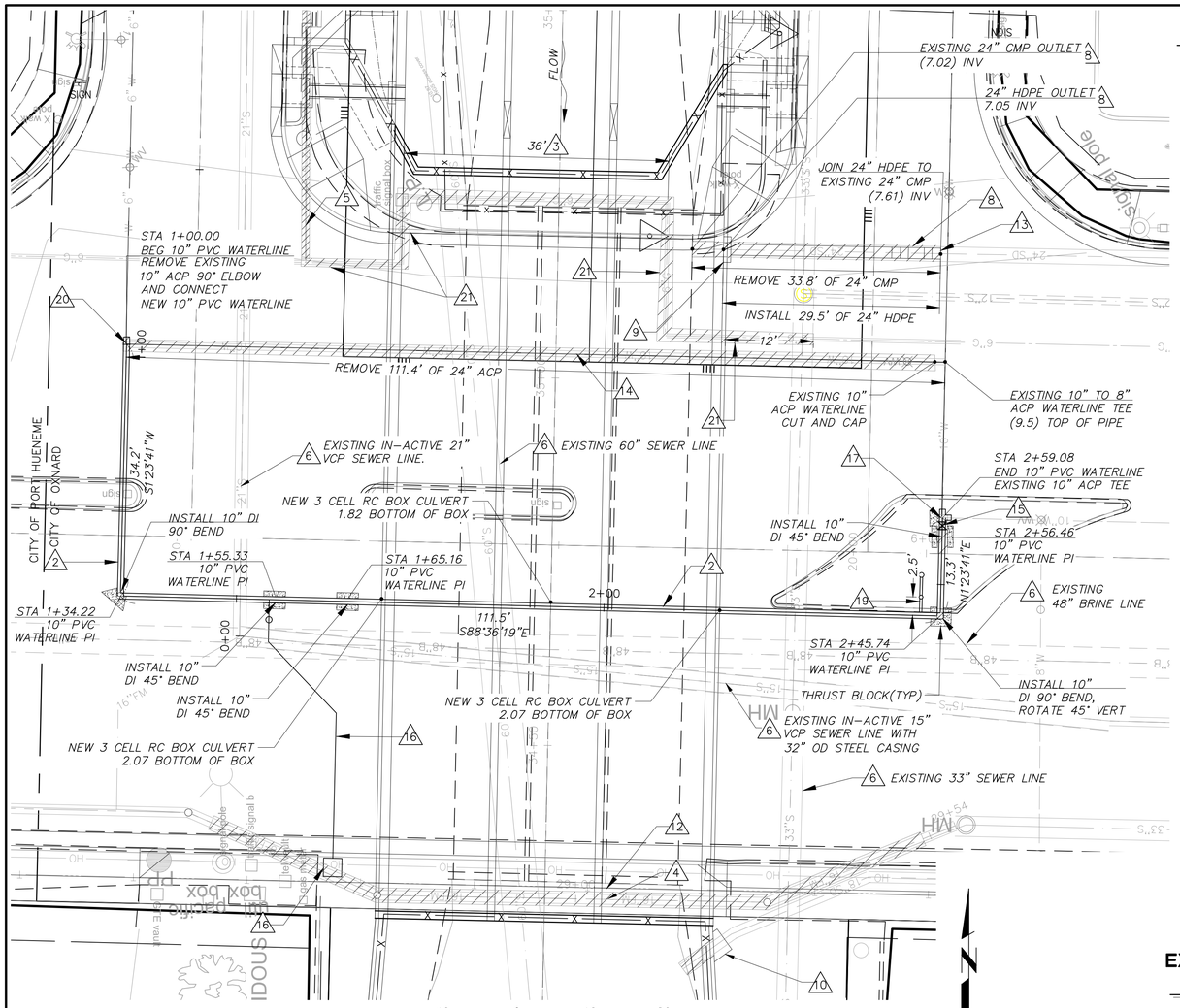

HUENEME RD AND NORTH AND SOUTH BOUND J SREET INTERSECTION - UNDERGROUND UTILIITIES

NOTES:

1. ALL UNDERGROUND UTILITY LOCATIONS TO BE VERIFIED BY POTHOLING. MATCH JOIN LOCATIONS TO EXISTING ELEVATIONS. (2) (6)
2. INSTALL NEW 10" PVC DR 14 PRESSURE CLASS 200 WATER LINE UNDER NEW CONCRETE BOX CULVERT and 33" VCP SS AS SHOWN PER CITY OF OXNARD STANDARD PLAN(COSP) PLATE 313, THRUST BLOCKING PER COSP PLATE 320. WORK TO BE DONE IN STAGE 2. TRENCH PER DETAIL (X/7) (63)
3. REMOVE APPROXIMATELY 36' OF EXISTING/ABANDONED 6" GAS LINE. (6)
4. REMOVE EXISTING 16" DIP SS FORCE MAIN PER PLAN. ABANDON REMAINDER IN PLACE. WORK TO BE DONE IN STAGE 1. (6)
5. REMOVE INTERFERING PORTIONS OF EXISTING ABONDONED 2" GAS LINE.
6. PROTECT IN PLACE PER PLAN.
7. REMOVE INTERFERING PORTION OF 18" CSP. SEE SHEET 10 FOR CONNECTION DETAILS. (6)
8. REMOVE 24" CMP AND REPLACE WITH 24" HDPE TO LIMITS SHOWN ON PLANS AND PER DETAIL (V/8). WORK TO BE DONE IN STAGE 3. (6) (7) (59)
9. CONSTRUCT 24" PIPE TO RCB JUNCTION STRUCTURE PER COSP PLATE 525, A = 90°; CASE 1. S PER DETAIL (V/8). (61)
10. REMOVE INTERFERING PORTION OF 18" RCP. CONSTRUCT 18" PIPE TO RCB JUNCTION STRUCTURE PER COSP PLATE 525, A = 57°; CASE 2, S PER PLAN (6) (7)
11. REMOVE INTERFERING 15" CSP. SEE SHEET 10 FOR CONNECTION TO NEW CATCH BASIN DETAILS. (6) (7)
12. EXISTING CABLE/TELEPHONE TO BE RELOCATED BY OTHERS.
13. INSTALL 24" RC COLLAR PER COSP PLATE 512. WORK TO BE DONE IN STAGE 3. (60)
14. REMOVE EXISTING 10" ACP WATERLINE. WORK TO BE DONE IN STAGE 3. (62)
15. INSTALL 10" R.S. GATE VALVE AND NECESSARY FITTINGS PER COSP PLATES 302 AND 303. WORK TO BE DONE IN STAGE 2. (65)
16. INSTALL COMBINATION AIR-VACUUM VALVE PER PLAN AND PER COSP PLATE 308. WORK TO BE DONE IN STAGE 1 AND 2. (64)
17. REPLACE EXISTING 10" ACP TEE WITH 10" DUCTILE IRON(DI) TEE. REMOVE INTERFERING 10" ACP WATERLINE AND PLUG. (62) (63)
18. INSTALL STEEL CASING AND EXTENDED CRADLE PER DETAIL. (N/8) (66)
19. INSTALL 4" BLOW-OFF VALVE PER COSP PLATE 307. (67)
20. REMOVE EXISTING 10" ACP ELBOW. CONNECT NEW 10" PVC WATERLINE TO EXISTING 10" ACP WATERLINE. (62) (63)
21. EXISTING 6" GAS LINE REMOVED BY OTHERS.

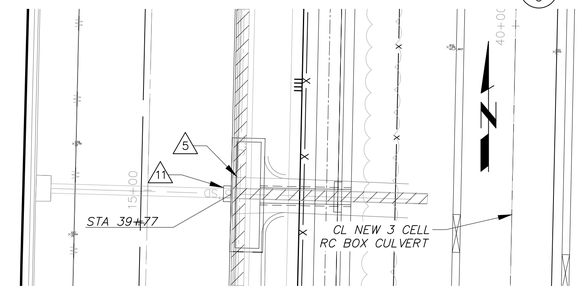

EXISTING 18" CMP REMOVAL AT NEW 3 CELL RC BOX CULVERT STATION 39+77, S/B J STREET

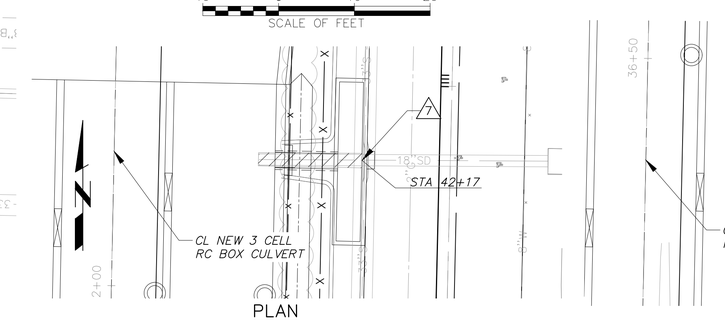

EXISTING 18" CMP REMOVAL AT NEW 3 CELL RC BOX CULVERT STATION 42+17, N/B J STREET

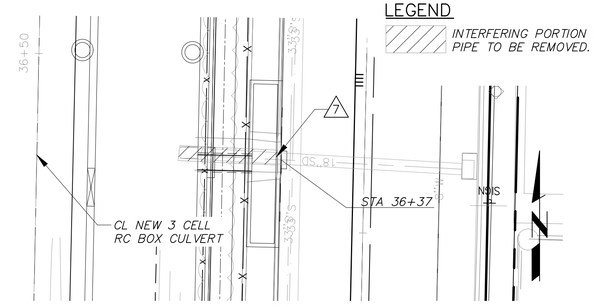

EXISTING 18" CMP REMOVAL AT NEW 3 CELL RC BOX CULVERT STATION 36+37, N/B J STREET

LEGEND

INTERFERING PORTION OF PIPE TO BE REMOVED.

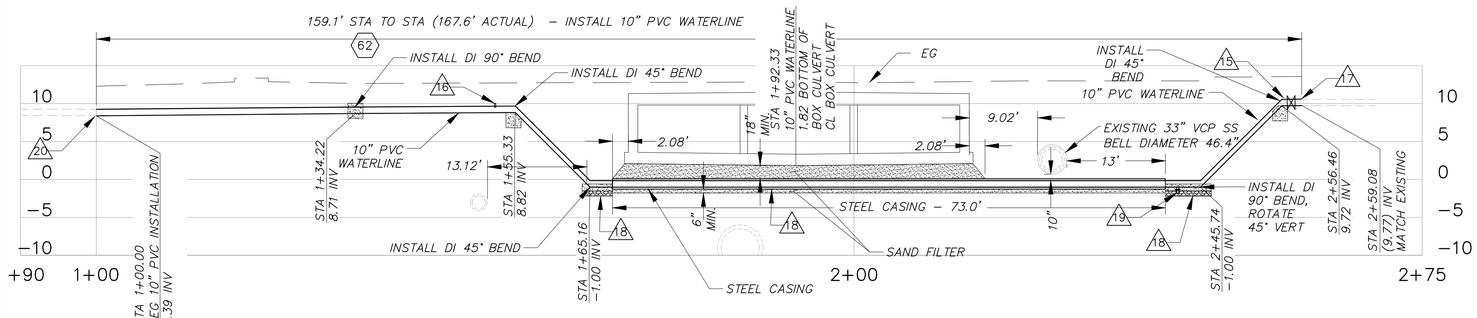

10" PVC WATERLINE INSTALLATION

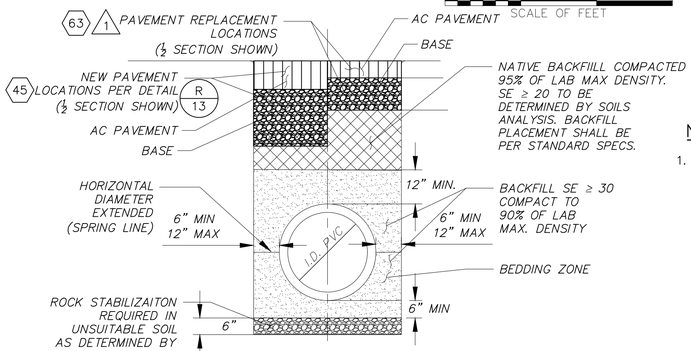

PVC PIPE INSTALLATION DETAIL

NOT TO SCALE

NOTE:

1. REPLACE AC PAVEMENT WITH 1" MORE THAN EXISTING AC THICKNESS. BASE MATERIAL THICKNESS SHALL BE AT LEAST THE SAME AS EXISTING OR 12", WHICHEVER IS LARGER.

REGISTERED PROFESSIONAL ENGINEER KIRK R. NORMAN No. 50367 Exp. 6/30/21 CIVIL STATE OF CALIFORNIA

PLOT DATE: 8/26/20

SAVE DATE: 8/24/20 DOKTOROV, NATALIYA K:\PROJECTS\ZONE2\TSUMAS(CHUMASH)CREEK\82323_TSUMAS_CREEK_HUENEME_RD_JANE_DR\DESIGN\DESIGNDRAWINGS\FINAL_PLANS\UNDERGROUND_UTILITY_DETAILS.DWG

D			
C			
B			
A			
△	REVISION DESCRIPTION	APP.	DATE

JM	DESIGNED	Kirk R Norman	8/26/2020 WATERSHED PROJECT MANAGER DATE
JM/ND	DRAWN		WATERSHED DEPUTY DIRECTOR DATE
K NORMAN	CHECKED		WATERSHED DIRECTOR DATE

VENTURA COUNTY PUBLIC WORKS AGENCY WATERSHED PROTECTION

SPEC. NO. WP21-01

PROJ. NO. 82323

TŠUMAŠ (CHUMASH) CREEK IMPROVEMENTS HUENEME ROAD TO UPSTREAM OF JANE DRIVE

UNDERGROUND UTILITY DETAILS

SHEET 7 OF 30

DRAWING SET NO. WP-2-386

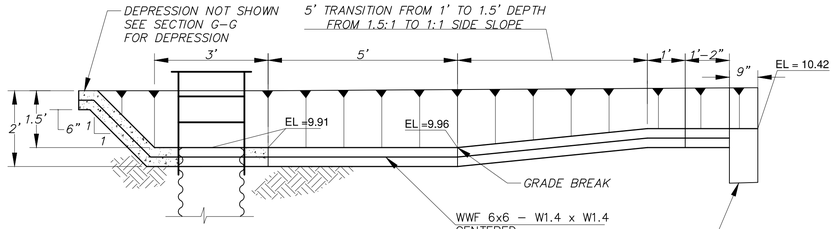

SECTION E–E

37 | 1/9 CONCRETE CUTOFF WALL PER

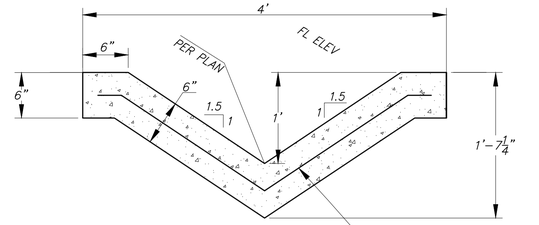

SECTION F–F

27 CURB OPENING CATCH BASINS "A" AND "B" SEE SHEET 10 FOR MORE DETAILS

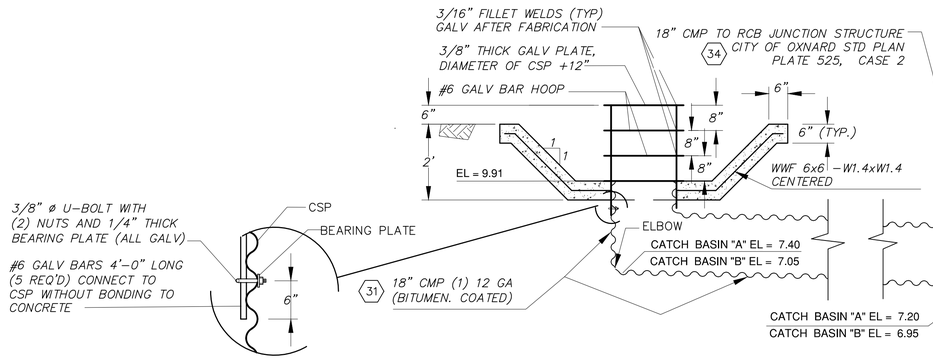

DETAIL "A"

SECTION D–D

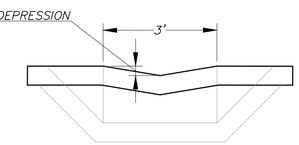

SECTION G–G

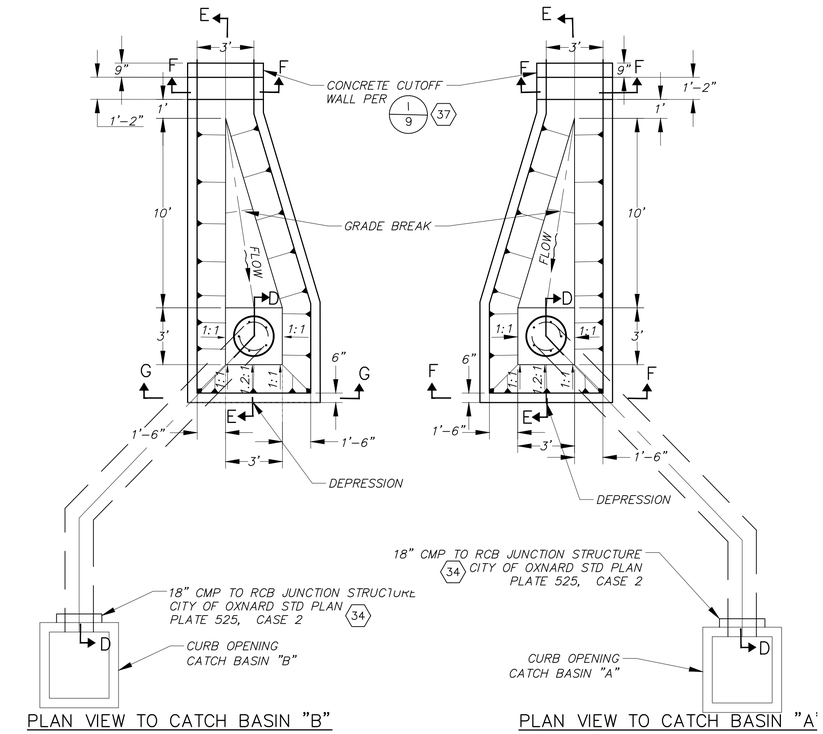

PLAN VIEW TO CATCH BASIN "B"

PLAN VIEW TO CATCH BASIN "A"

37 K/– **CMP DROP INLET DETAIL**

NOT TO SCALE

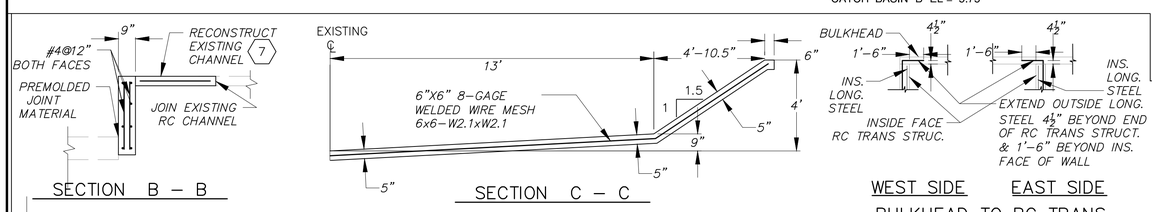

SECTION B – B

SECTION C – C

WEST SIDE EAST SIDE

BULKHEAD TO RC TRANS STRUCTURE CONNECTION DETAIL

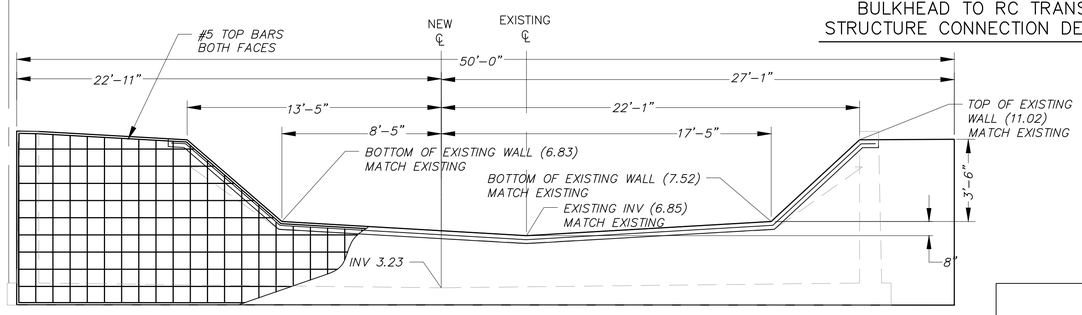

SECTION A – A

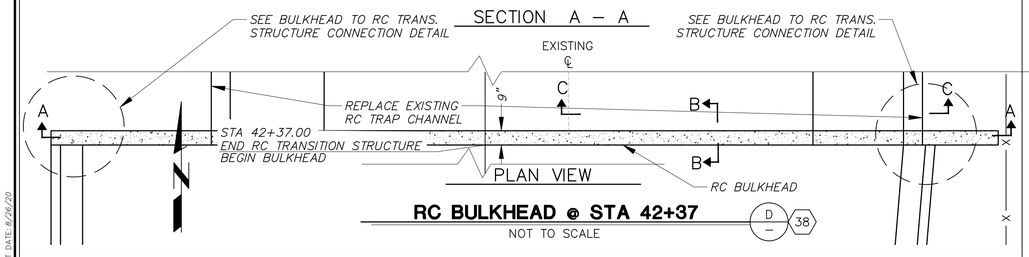

PLAN VIEW

RC BULKHEAD @ STA 42+37

D/– 38

NOT TO SCALE

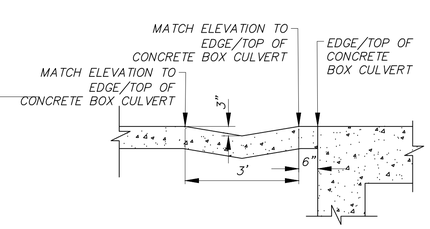

39 M/– **SWALE CROSSING DRIVEWAY DETAIL**

NOT TO SCALE

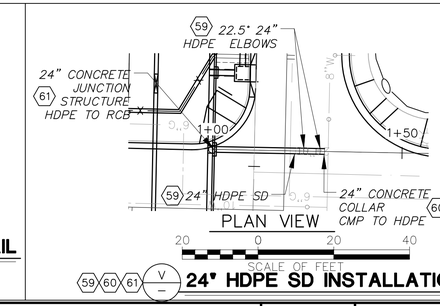

PLAN VIEW

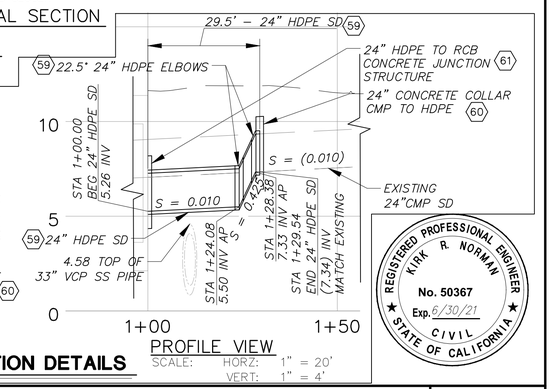

PROFILE VIEW

SCALE: HORZ: 1" = 20' VERT: 1" = 4'

59 60 61 V/– **24" HDPE SD INSTALLATION DETAILS**

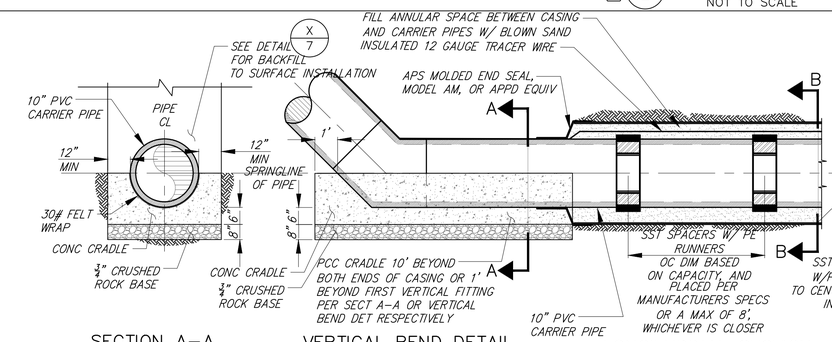

SECTION A–A

VERTICAL BEND DETAIL

LONGITUDINAL SECTION

SECTION B–B

66 N/– **STEEL CASING DETAILS**

NOT TO SCALE

REGISTERED PROFESSIONAL ENGINEER KIRK R. NORMAN No. 50367 Exp. 6/30/21 CIVIL STATE OF CALIFORNIA

SAVE DATE: 8/20/20 DOKTOROV, NATALIYA K:\PROJECTS\ZONE2\TSUMAS(CHUMASH)CREEK\82323_TSUMAS_CREEK_HUENEME_RD_JANE_DR\DESIGN\DESIGNDRAWINGS\FINAL_PLANS\MISCELLANEOUS_DETAILS.DWG

PLOT DATE: 8/20/20

	REVISION	DESCRIPTION	APP.	DATE
D				
C				
B				
A				
△				

J M DESIGNED
J M DRAWN
K NORMAN CHECKED

Kirk R. Norman 8/26/2020
WATERSHED PROJECT MANAGER DATE
WATERSHED DEPUTY DIRECTOR DATE
WATERSHED DIRECTOR DATE

VENTURA COUNTY PUBLIC WORKS AGENCY WATERSHED PROTECTION

SPEC. NO. WP21–01
PROJ. NO. 82323

TŠUMAŠ (CHUMASH) CREEK IMPROVEMENTS HUENEME ROAD TO UPSTREAM OF JANE DRIVE

MISCELLANEOUS DETAILS –1

SHEET 8 OF 30

DRAWING SET NO. WP–2–386

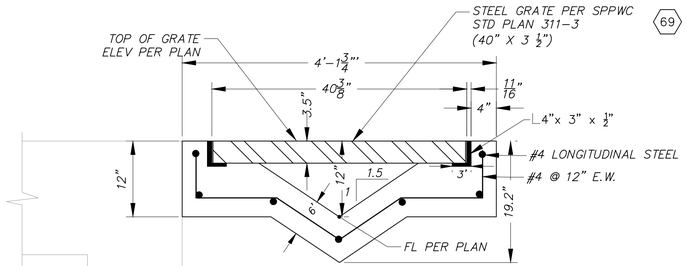

SECTION A – A

NOT TO SCALE

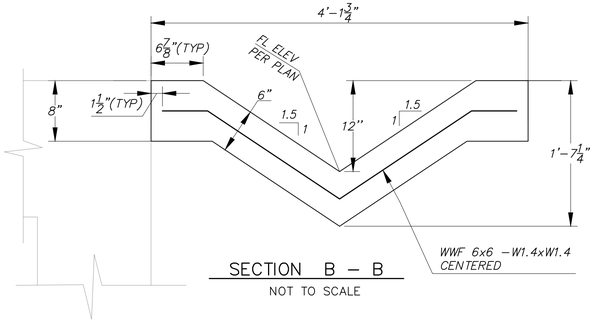

SECTION B – B

NOT TO SCALE

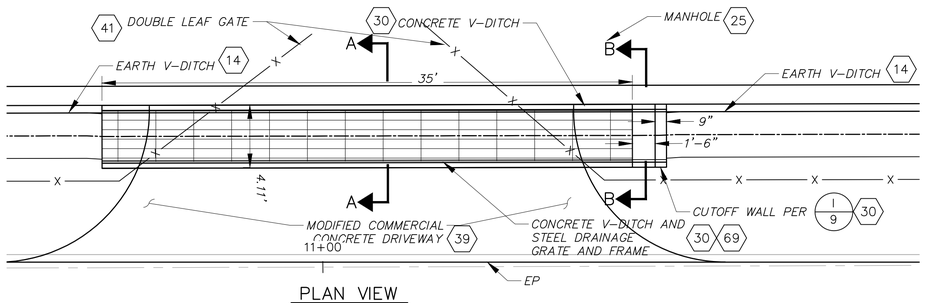

PLAN VIEW

NOT TO SCALE

CONCRETE V-DITCH WITH GRATE H/– 30 69

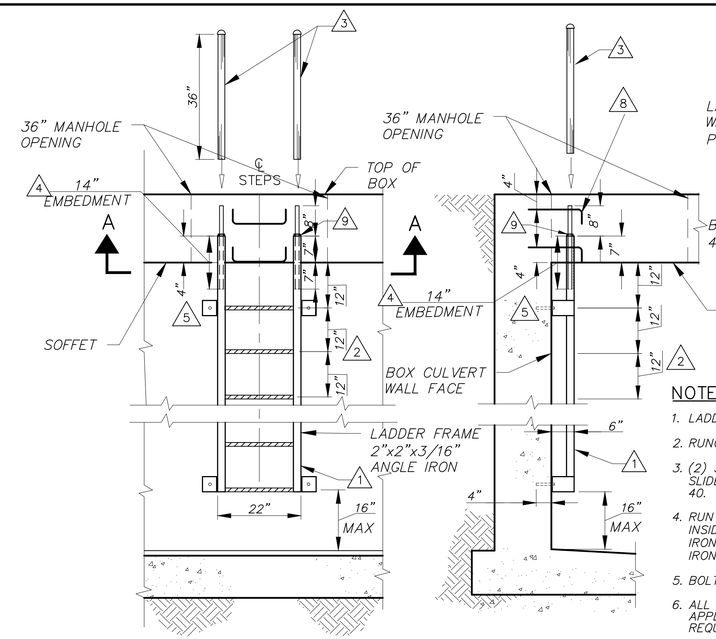

FRONT VIEW

SIDE VIEW

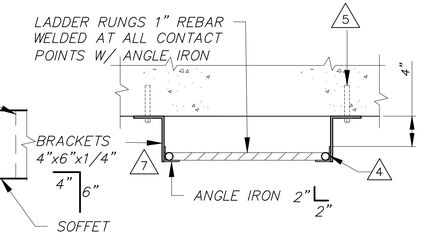

SECTION A–A

N.T.S.

LADDER DETAILS C/– 26

NOT TO SCALE

NOTES:

1. LADDER OVERALL WIDTH 22".
2. RUNGS 12" ON CENTER–1" DIA. REBAR (#8).
3. (2) 36" LONG, 1–1/8" I.D. GALV. IRON PIPE HANDLES, SLIDES OVER TOP RAILS (NOT AFFIXED). GALV. CAP SCHED. 40.
4. RUN THE #8 PLAIN (NON–RIBBED) REBAR TOP RAIL DOWN INSIDE THE ANGLE IRON APPROX 14". WELD TO THE ANGLE IRON W/LONG BEADS. EXTENDS 8" BEYOND TOP OF ANGLE IRON. TOTAL LENGTH OF TOP RAIL 22".
5. BOLT TO CHANNEL WALL WITH 3/4" RED HEADS.
6. ALL LADDERS WILL BE CUSTOM FIT TO EACH DIFFERENT APPLICATION. CHANNEL WALLS HIGHER THAN 7 FT WILL REQUIRED ADDITIONAL BRACKETS.
7. BRACKETS: 1/4"x4" FLAT STOCK CUT AT 4"x6" WELDED TOGETHER, WELDED TO THE 2" ANGLE IRON AT ALL CONTACT POINTS.
8. STEEL STEP PER SPPWC 635–3, SPACING PER PLAN.
9. 1/2" LONG, 1–1/8" I.D GALVANIZED IRON PIPE, SLIDE OVER AND WELD TO TOP RAIL.

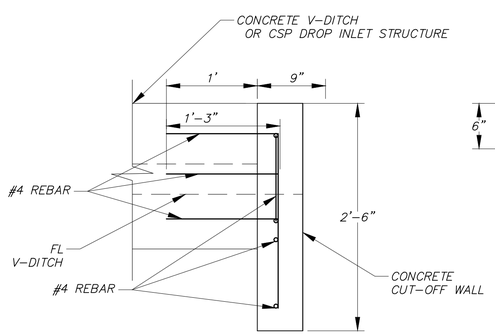

PROFILE VIEW

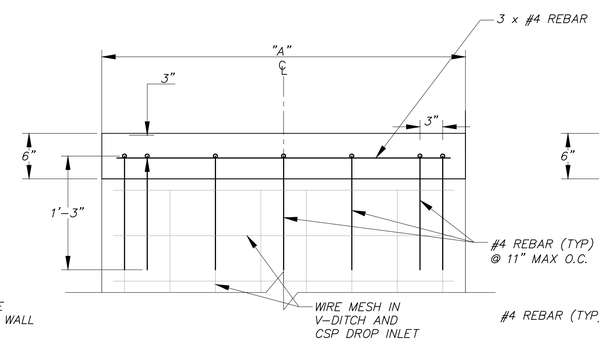

PLAN VIEW

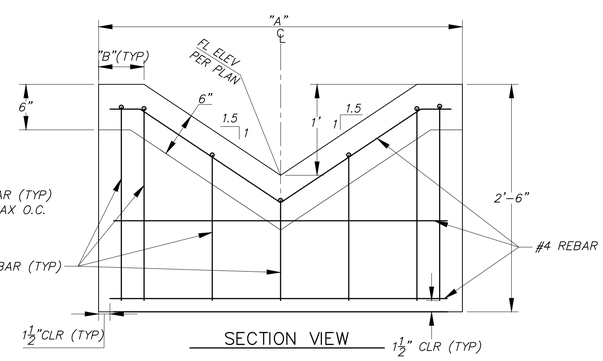

SECTION VIEW

CUT-OFF WALL CONCRETE V-DITCH AND CMP DROP INLET STRUCTURE I/– 30 37

NOT TO SCALE

NOTES:

1. A = 4.11' FOR V-DITCH WITH GRATE = 4' FOR CSP DROP INLET.
2. B = 6–7/8" FOR V-DITCH WITH GRATE = 6" FOR THE CSP DROP INLET.

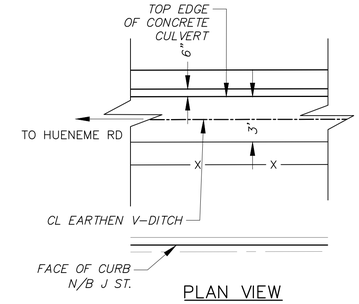

PLAN VIEW

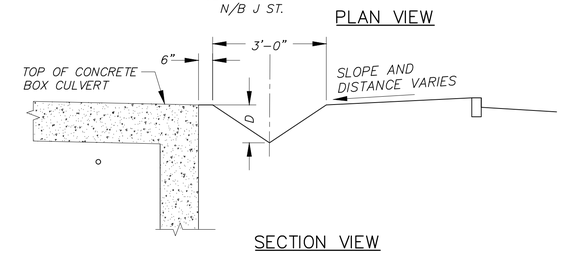

SECTION VIEW

EARTHEN V-DITCH DETAIL F/– 14

NOT TO SCALE

NOTES:

1. THIS IS LOOKING UPSTREAM ON THE EAST SIDE.
2. "D" CALLED OUT IN PLAN VIEW ON SHEET 3.
3. MIRROR DIMENSIONS FOR THE V-DITCH ON THE WEST SIDE.

REGISTERED PROFESSIONAL ENGINEER KIRK R. NORMAN No. 50367 Exp. 6/30/21 CIVIL STATE OF CALIFORNIA

PLOT DATE: 9/26/20

SAVE DATE: 8/20/20 DOKTOROV, NATALIYA K:\PROJECTS\ZONE2\TSUMAS(CHUMASH)CREEK\82323_TSUMAS_CREEK_HUENEME_RD_JANE_DR\DESIGN\DESIGNDRAWINGS\FINAL_PLANS\MISCELLANEOUS_DETAILS.DWG

D			
C			
B			
A			
△	REVISION DESCRIPTION	APP.	DATE

JM	DESIGNED	
JM / ND	DRAWN	
K NORMAN	CHECKED	
Kirk R Norman	WATERSHED PROJECT MANAGER	8/26/2020 DATE
	WATERSHED DEPUTY DIRECTOR	DATE
	WATERSHED DIRECTOR	DATE

VENTURA COUNTY PUBLIC WORKS AGENCY WATERSHED PROTECTION

SPEC. NO. WP21–01

PROJ. NO. 82323

TŠUMAŠ (CHUMASH) CREEK IMPROVEMENTS
HUENEME ROAD TO UPSTREAM OF JANE DRIVE

MISCELLANEOUS DETAILS– 2

SHEET 9 OF 30

DRAWING SET NO. WP–2–386

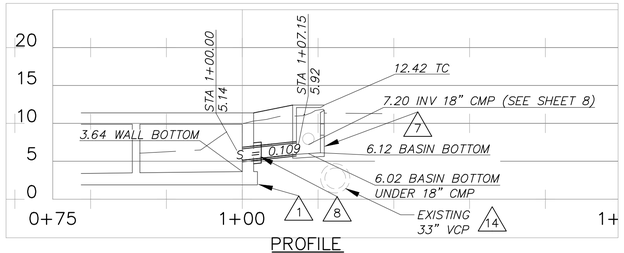

PROFILE

SCALE: HORZ: 1" = 10'
VERT: 1" = 10'

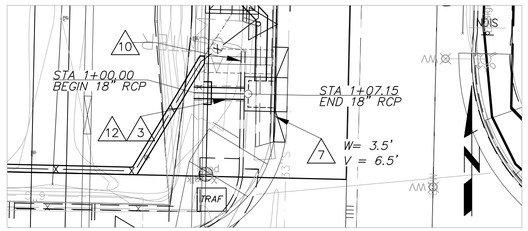

PLAN

SCALE OF FEET

CURB OPENING CATCH BASIN A (27)

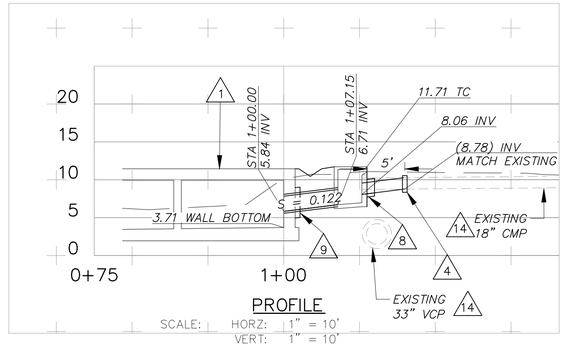

PROFILE

SCALE: HORZ: 1" = 10'
VERT: 1" = 10'

PLAN

SCALE OF FEET

CURB OPENING CATCH BASIN #1 (29)

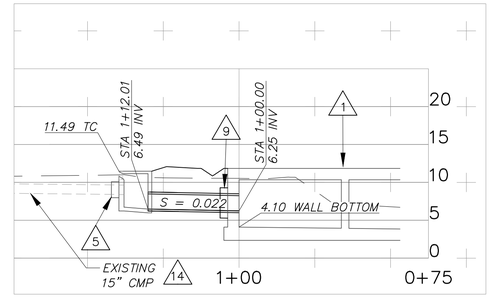

PROFILE

SCALE: HORZ: 1" = 10'
VERT: 1" = 10'

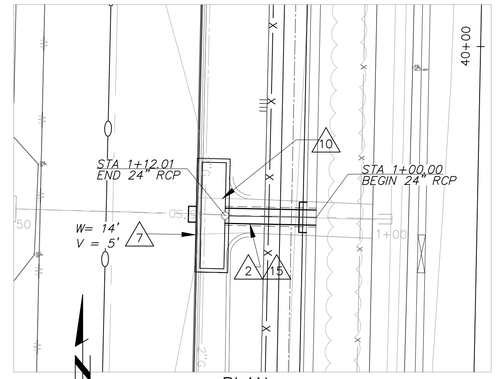

PLAN

SCALE OF FEET

CURB OPENING CATCH BASIN #2

NOTES:

1. CONSTRUCT RC TRIPLE BOX PER DETAIL (A/4) (4)
2. INSTALL 24" RCP (D-1000) PER PLAN AND PROFILE. (33)
3. INSTALL 18" RCP (D-1000) PER PLAN AND PROFILE (32)
4. CONSTRUCT CMP TO CMP COLLAR PER CITY OF STANDRAD PLATE 512. (36)
5. CONSTRUCT 15" PIPE TO RCB JUNCTION STRUCTURE PER CITY OF OXNARD STANDARD PLATE 524, A = 90°, C = 18". (7)
6. INSTALL 5' WIDE CULVERT WINDOW PER DETAIL (E/5) (21)
7. INSTALL CURB OPENING CATCH BASIN PER CITY OF OXNARD STANDARD PLAN PLATE #501, W = PER PLAN, V PER PLAN. FLOOR OF BASIN SHALL BE SLOPED 12:1 MIN. IN ALL DIRECTIONS TO THE OUTLET PIPE UNLESS OTHERWISE NOTED. (27) (28) (29)
8. CONSTRUCT 18" PIPE TO RCB JUNCTION STRUCTURE PER CITY OF OXNARD STANDARD PLATE 524, A = 90°, C = 2'-3". (34)
9. CONSTRUCT 24" PIPE TO RCB JUNCTION STRUCTURE PER CITY OF OXNARD STANDARD PLATE 524, A = 90°, C = 2'-3". (35)
10. REMOVE EXISTING CONCRETE OVERSIDE DRAIN (6)
11. INSTALL 18" CMP PER PLAN AND PROFILE. (31)
12. TRENCH AND BACKFILL PER DETAIL (O/–)
13. TRENCH AND BACKFILL PER DETAIL (Q/–)
14. PROTECT IN PLACE. (7)
15. TRENCH AND BACK FILL PER DETAIL. (P/–)

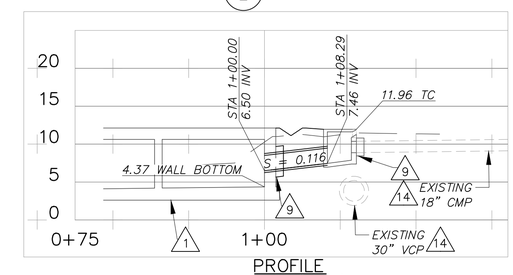

PROFILE

SCALE: HORZ: 1" = 10'
VERT: 1" = 10'

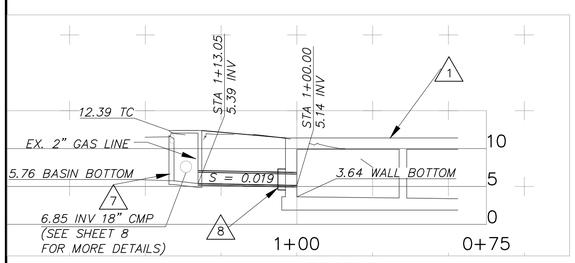

PROFILE

SCALE: HORZ: 1" = 10'
VERT: 1" = 10'

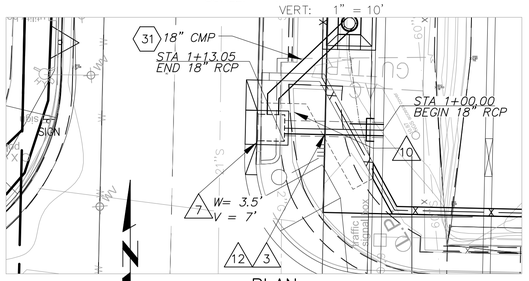

PLAN

SCALE OF FEET

CURB OPENING CATCH BASIN B (27)

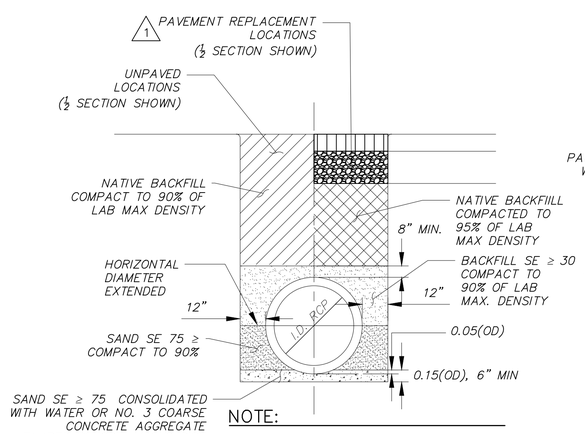

NOTE:

1. REPLACE AC PAVEMENT WITH 1" MORE THAN EXISTING AC THICKNESS. BASE MATERIAL THICKNESS SHALL BE AT LEAST THE SAME AS EXISTING.

RC PIPE INSTALLATION DETAIL (O/–) (32) (33)

NOT TO SCALE

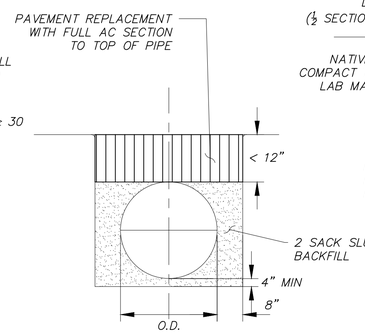

C.M. PIPE SPECIAL CONDITION INSTALLATION DETAIL (Q/–) (31)

NOT TO SCALE

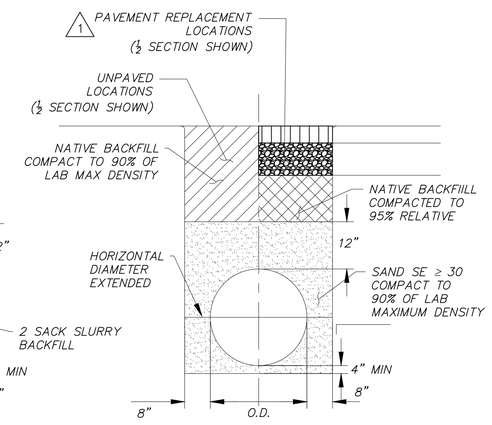

C.M. PIPE INSTALLATION DETAIL (P/–) (31)

NOT TO SCALE

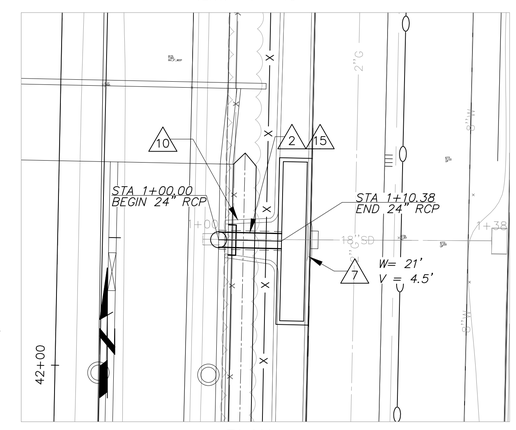

PLAN

SCALE OF FEET

CURB OPENING CATCH BASIN #3

REGISTERED PROFESSIONAL ENGINEER
KIRK R. NORMAN
No. 50367
Exp. 6/30/21
CIVIL
STATE OF CALIFORNIA

PLOT DATE: 8/26/20

SAVE DATE: 8/24/20 DOKTOROV, NATALIYA K:\PROJECTS\ZONE2\TSUMAS(CHUMASH)CREEK\82323_TSUMAS_CREEK_HUENEME_RD_JANE_DR\DESIGN\DESIGNDRAWINGS\FINAL_PLANS\SIDE DRAINS PLAN AND PROFILE.DWG

D			
C			
B			
A			
△	REVISION DESCRIPTION	APP.	DATE

JM DESIGNED	Kirk R Norman WATERSHED PROJECT MANAGER	8/26/2020 DATE
JM / ND DRAWN	WATERSHED DEPUTY DIRECTOR	DATE
K NORMAN CHECKED	WATERSHED DIRECTOR	DATE

VENTURA COUNTY
PUBLIC WORKS AGENCY
WATERSHED PROTECTION

SPEC. NO. WP21-01
PROJ. NO. 82323

TŠUMAŠ (CHUMASH) CREEK IMPROVEMENTS
HUENEME ROAD TO UPSTREAM OF JANE DRIVE

SIDE DRAINS PLAN AND PROFILE

SHEET 10 OF 30
DRAWING SET NO. WP-2-386

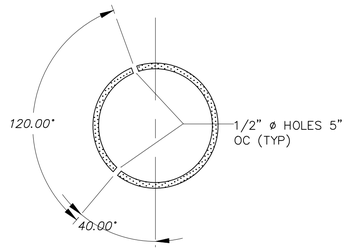

PERFORATED PIPE DETAIL (L1 / –) (22)
NOT TO SCALE

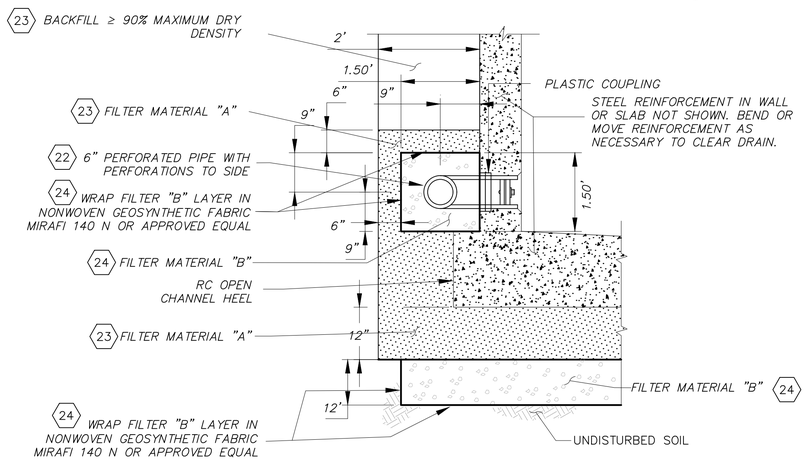

SECTION A–A
1"=2'

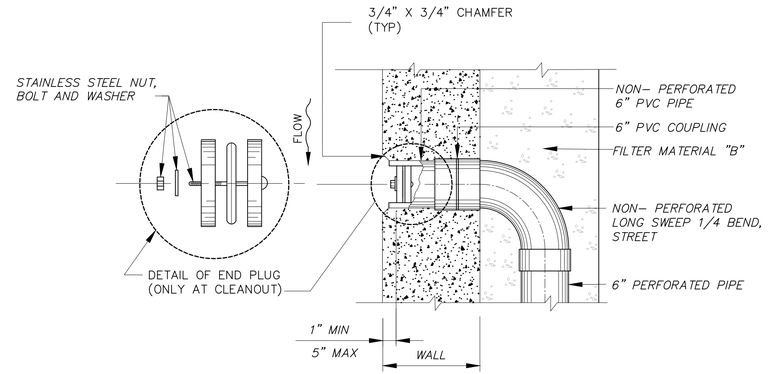

CLEANOUT AND INLET END DETAIL (L2 / –) (22)
1"=1'

IMPERVIOUS PLUGS DATA TABLE
STATION
35+50
37+00
39+00
41+00

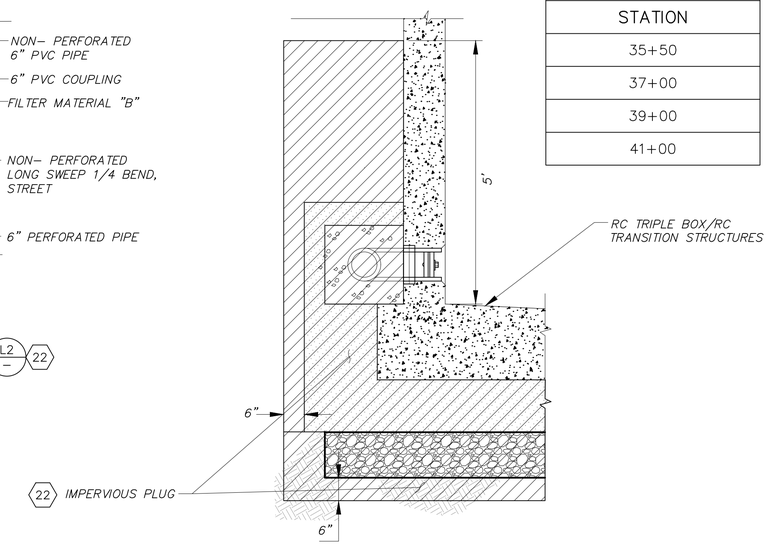

SECTION B–B

NOTES FOR SUBDRAIN SYSTEM

1. SUBDRAINS SHALL BE INSTALLED ALONG EACH WALL IN OPEN AND RC BOX REACHES.
2. SUBDRAIN CLEANOUT SHALL BE PLACED AT DESIGNATED LOCATIONS AS SHOWN ON PLAN AND PROFILE SHEETS AND ELSEWHERE AT INTERVALS OF NOT MORE THAN 200 FEET UNLESS OTHERWISE SHOWN.
3. ALL PIPE SHALL BE PERFORATED AND SHALL BE POLYVINYL CHLORIDE (PVC) PLASTIC (SCHEDULE 40). PIPE PERFORATIONS SHALL BE ON 120 DEGREE ARC AND FACE OUTWARD FROM THE WALL. (SEE DETAIL HEREON)
4. SUBDRAIN INLETS AND CLEANOUT ENDS SHALL BE LOCATED A MINIMUM OF 2 FEET FROM TRANSVERSE CONSTRUCTION JOINTS.
5. SUBDRAIN INLETS SHALL BE SET IN WALL AND NO PART OF IT SHALL PROTRUDE BEYOND THE INSIDE FACE OF CHANNEL WALL.
6. UPON COMPLETION OF THE PROJECT, CONTRACTOR SHALL CLEAR ALL SUBDRAINS OF DIRT, RUBBLE, OR OTHER RESTRICTIONS THAT WOULD PROHIBIT FREE FLOW OF WATER THROUGH THE SUBDRAIN PIPE.
7. FILTER B MATERIAL SHALL BE PLACED UP TO PIPE INVERT PRIOR TO INSTALLING PIPE.
8. AVOID USE OF HEAVY EQUIPMENT NEAR OR OVER THE SUBDRAIN PIPE.
9. IMPERVIOUS PLUG SHALL BE PLACED AGAINST CHANNEL WALL AND HEEL AS SHOWN IN SECTION B–B, EQUALLY SPACED BETWEEN CLEANOUT AND END OF WALL DRAINS.

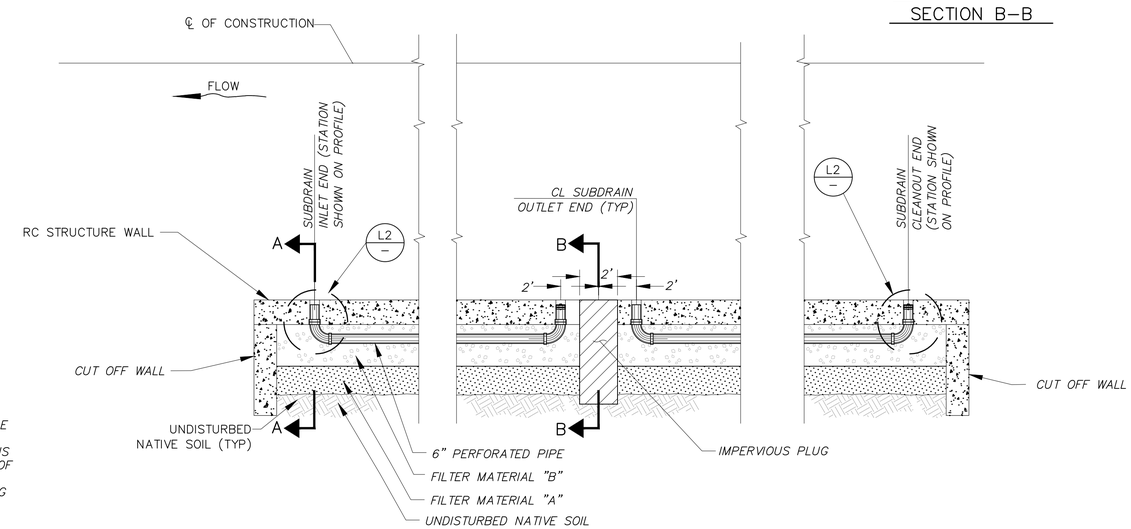

PLAN VIEW

SUBDRAIN SYSTEM (L / –) (14) (22)
NOT TO SCALE

REGISTERED PROFESSIONAL ENGINEER
KIRK R. NORMAN
No. 50367
Exp. 6/30/21
CIVIL
STATE OF CALIFORNIA

PLOT DATE: 9/23/20

SAVE DATE: 9/23/20 MUELLER, JOHN K:\PROJECTS\ZONE2\TSUMAS(CHUMASH)CREEK\82323_TSUMAS_CREEK_HUENEME_RD_JANE_DR\DESIGN\DESIGNDRAWINGS\FINAL_PLANS\10_SUBDRAIN_DETAILS.DWG

D			
C			
B			
A			
△	REVISION DESCRIPTION	APP.	DATE

J M	Kirk R Norman	9/24/2020
DESIGNED	WATERSHED PROJECT MANAGER	DATE
JM		9/28/2020
DRAWN	WATERSHED DEPUTY DIRECTOR	DATE
K NORMAN		9/29/2020
CHECKED	WATERSHED DIRECTOR	DATE

VENTURA COUNTY
PUBLIC WORKS AGENCY
WATERSHED PROTECTION

SPEC. NO. WP21–01
PROJ. NO. 82323

TŠUMAŠ (CHUMASH) CREEK IMPROVEMENTS
HUENEME ROAD TO UPSTREAM OF JANE DRIVE
SUBDRAIN DETAILS

SHEET 11 OF 30
DRAWING SET NO. WP–2–386

ADDENDUM NO. 1

FENCE NOTES.

1. FOR CONFIGURATION OF TOP AND BOTTOM EDGE OF CHAIN LINK FABRIC SEE SPECIFICATION.
2. SECURE DRIVE FIT GALVANIZED CAP TO POST WITH 1/4" ROUND HEAD RIVET.
3. INTERMEDIATE AND SLOPE POSTS SHALL BE INSTALLED AT NOT MORE THAN 300' INTERVALS ALONG FENCE LINE AND AT GRADE CHANGES EXCEEDING 5%.
4. SEE POST EMBEDMENT DETAIL SHOWN HEREON FOR POST EMBEDMENT IN CHANNEL WALL.
5. EYE TOPS MAY BE USED FOR LINE POSTS AT LOCATIONS WHERE NO TENSION ROD IS REQUIRED.
6. ALL SURFACES SHALL MEET THE MINIMUM REQUIREMENTS OF COATING AS PER SSPWC 210-3.2 AND TABLE 210-3.2(A).
7. GATE LATCH SHALL BE LOCATED SO THAT THE GATE IS HELD COMPLETELY OFF OF THE ACCESS ROAD AND SHALL ATTACH TO THE GATE BETWEEN 2/3 AND 3/4 OF THE DISTANCE FROM THE SWING GATE POST.
8. THREADED ROD WITH NUT MAYBE USED IN PLACE OF TURN BUCKLE.
9. GATE POSTS SHALL BE CAPPED WITH 6" GALVANIZED STEEL CAP AFTER BEING COMPLETELY FILLED WITH CONCRETE.
10. WELDS SHALL BE SLOT OR FILLET WELDS EQUAL TO THICKNESS OF PIPE. WELD ALL JOINTS ALL AROUND.
11. 4-FT LONG 3/8" GALVANIZED LOCKING CHAIN WELDED AT THE CENTER TO GATE FRAME PIPE AND GALVANIZE THE WELDING AREA.
12. GATE LATCH COMPOSED OF 1/4-INCH GRADE 30 HOT DIP GALVANIZED CHAIN, 8 INCHES IN LENGTH. CHAIN SHALL BE WELDED TO THE SWINGING FACE OF THE GATE FRAME PIPE WITH A 1" X 3 1/2" BRONZE BOLT SNAP ATTACHED TO THE END. THE AREA OF THE WELD SHALL BE GALVANIZED.

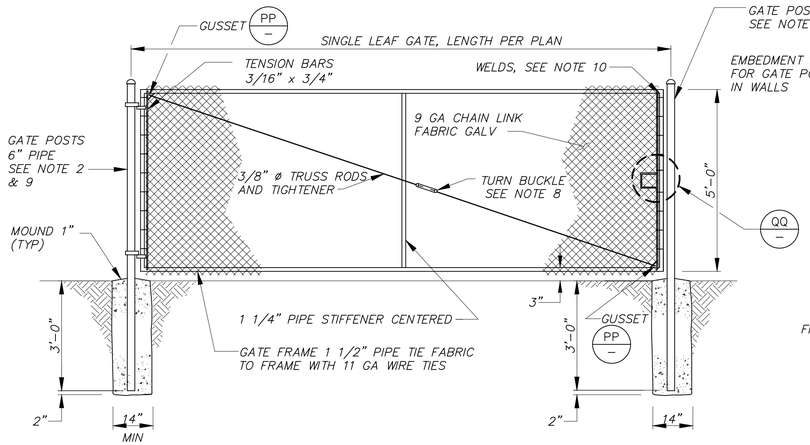

TYPICAL ACCESS ROAD SINGLE LEAF GATE DETAIL MM 42 43

NOT TO SCALE

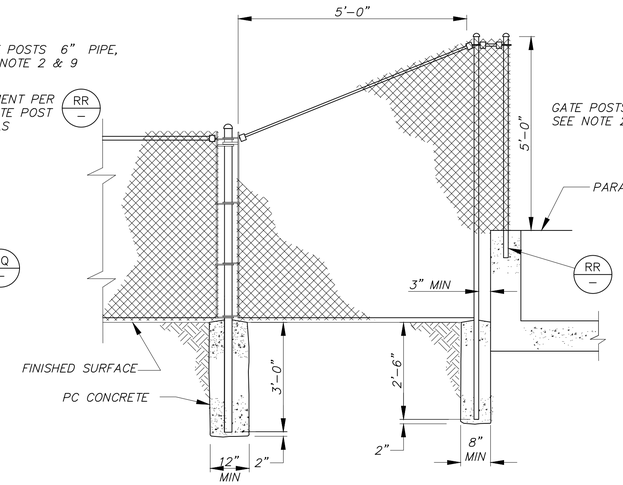

TYPICAL FENCE TRANSITION DETAIL NN

NOT TO SCALE

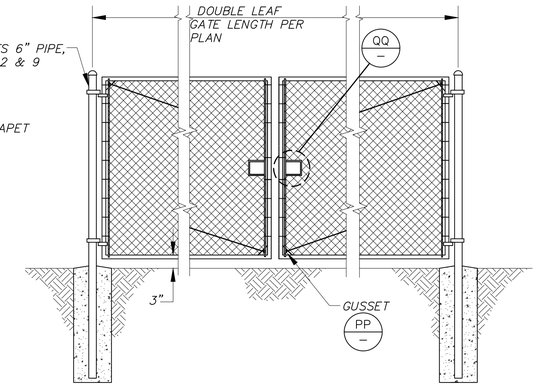

TYPICAL ACCESS ROAD DOUBLE LEAF GATE DETAIL QQ 41

NOT TO SCALE

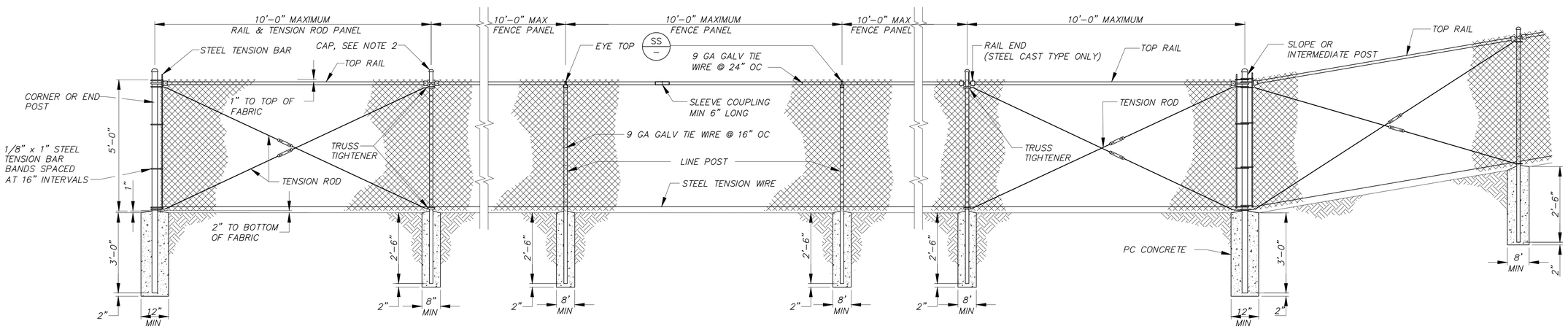

TYPICAL FENCE DETAIL LL 40 41 42

NOT TO SCALE

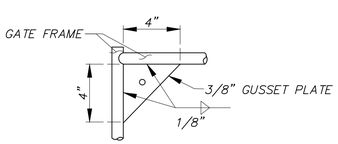

GUSSET DETAIL PP

NOT TO SCALE

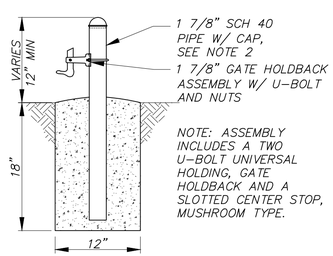

GATE LATCH DETAIL UU

NOT TO SCALE

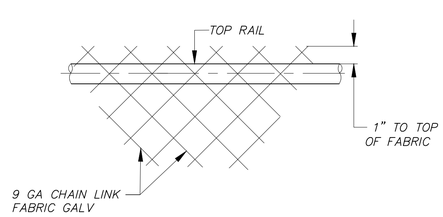

RAIL AND TOP FENCE DETAIL TT

NOT TO SCALE

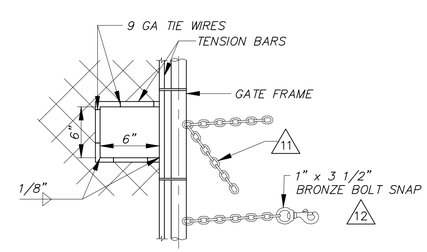

CHAIN AND LOCK CUT-OUT DETAIL QQ

NOT TO SCALE

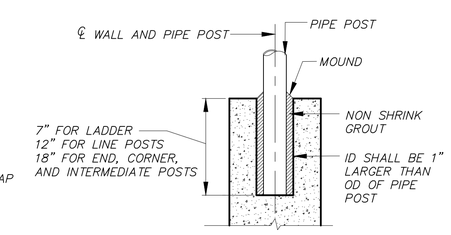

POST EMBEDMENT IN REINFORCED CONCRETE DETAIL RR

NOT TO SCALE

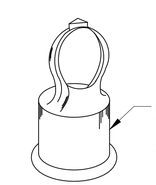

EYE TOP DETAIL SS

NOT TO SCALE

REGISTERED PROFESSIONAL ENGINEER KIRK R. NORMAN No. 50367 Exp. 6/30/21 CIVIL STATE OF CALIFORNIA

PLOT DATE: 8/26/20

SAVE DATE: 8/24/20 125936 K:\PROJECTS\ZONE2\TSUMAS(CHUMASH)CREEK\82323_TSUMAS_CREEK_HUENEME_RD_JANE_DR\DESIGN\DESIGNDRAWINGS\FINAL_PLANS\FENCE DETAILS.DWG

D			
C			
B			
A			
△	REVISION DESCRIPTION	APP.	DATE

JM DESIGNED	Kirk R. Norman WATERSHED PROJECT MANAGER	8/26/2020 DATE
JM/ND DRAWN	WATERSHED DEPUTY DIRECTOR	DATE
K NORMAN CHECKED	WATERSHED DIRECTOR	DATE

VENTURA COUNTY PUBLIC WORKS AGENCY WATERSHED PROTECTION

SPEC. NO. WP21-01

PROJ. NO. 82323

TŠUMAŠ (CHUMASH) CREEK IMPROVEMENTS
HUENEME ROAD TO UPSTREAM OF JANE DRIVE
FENCE DETAILS

SHEET 12 OF 30

DRAWING NO. WP-2-386

STREET IMPROVEMENT GENERAL NOTES

1. ALL WORK ON THIS PROJECT SHALL BE PERFORMED IN ACCORDANCE WITH THE LATEST EDITION OF THE CITY OF OXNARD STANDARD PLATES AND/OR CONTRACTOR DOCUMENTS, AND SPECIFICATIONS, THE STANDARD PLANS FOR PUBLIC WORKS CONSTRUCTION (SPPWC) LATEST EDITION AND SUPPLEMENT, AND THE STATE OF CALIFORNIA DEPARTMENT OF TRANSPORTATION (CALTRANS) 2018 STANDARD PLANS, WITH THE MOST STRINGENT GOVERNING.
2. AT LEAST FORTY-EIGHT (48) HOURS PRIOR TO COMMENCING CONSTRUCTION, CONTRACTOR SHALL CONTACT THE REGIONAL NOTIFICATION CENTER (UNDERGROUND SERVICE ALERT OF SOUTHERN CALIFORNIA – U.S.A. AT 811) AND REQUEST UTILITY OWNERS TO MARK OR OTHERWISE INDICATE THE LOCATION OF THEIR FACILITIES.
3. CITY OWNED UTILITY (WATER, WASTEWATER, STORM DRAIN, SURVEY) MANHOLE VAULTS, VALVE FRAMES AND COVERS, AND METER BOXES SHALL BE SET TO FINISHED GRADE BY THE CONTRACTOR IN ACCORDANCE WITH THE CURRENT STANDARD SPECIFICATIONS FOR THE CITY OF OXNARD.
4. THE LOCATION OF THE EXISTING UNDERGROUND UTILITIES HAVE BEEN LOCATED IN THE FIELD OR OBTAINED FROM THE BEST AVAILABLE RECORDS. THE CONTRACTOR SHALL ASSUME THE SOLE RESPONSIBILITY FOR CONFIRMING THE EXACT LOCATION OF THESE FACILITIES AND PROTECTING SAME FROM HARM. WHERE UNDERGROUND UTILITIES ARE SHOWN, THE CONTRACTOR SHALL ASSUME EVERY LOT IS SERVED BY A SERVICE CONNECTION FROM EACH UTILITY.
5. DURING ALL PHASES OF CONSTRUCTION, INCLUDING SUSPENSION OF WORK, UNTIL FINAL ACCEPTANCE OF THE PROJECT, OBSERVE, FOLLOW, AND IMPLEMENT ALL THE REQUIREMENTS OF THE NATIONAL POLLUTANT DISCHARGE ELIMINATION SYSTEM (NPDES) AND STORMWATER POLLUTION PREVENTION PLAN (SWPPP) AND KEEP THE WORK SITE CLEAN AND FREE FROM RUBBISH AND DEBRIS. ABATE DUST NUISANCE BY CLEANING, SWEEPING, AND SPRINKLING WITH, AND BY USING DUST FENCES OR OTHER METHODS AS DIRECTED BY THE ENGINEER THROUGHOUT THE CONSTRUCTION OPERATION.
6. CONTRACTOR SHALL VERIFY ALL CONTROLLING DIMENSIONS PRIOR TO ORDERING MATERIALS AND COMMENCING WORK.
7. WORK IN PUBLIC STREETS, ONCE BEGUN, SHALL BE PERFORMED TO COMPLETION WITHOUT DELAY SO AS TO PROVIDE MINIMUM INCONVENIENCE TO ADJACENT PROPERTY OWNERS AND TO THE TRAVELING PUBLIC.
8. ALL DAMAGE CAUSED TO PUBLIC STREETS, INCLUDING HAUL ROUTES, ALLEYS, SIDEWALKS, CURBS, STREET FURNISHINGS, AND TO PRIVATE PROPERTY SHALL BE REPAIRED AT THE SOLE EXPENSE OF THE CONTRACTOR TO THE ENGINEER'S SATISFACTION.
9. ALL DISTURBED MONUMENTS SHALL BE RESET IN ACCORDANCE WITH CITY STANDARD PLATE 609.
10. WHERE JOINING EXISTING PAVEMENT, SAWCUT TO SOUND PAVEMENT AND/OR OVERLAY AS REQUIRED TO PROVIDE PROPER CROSS SLOPE AND GRADE AS DIRECTOR BY THE CITY INSPECTOR. REPLACE ANY UNSOUND PAVEMENT.
11. SAWCUTTING OF EXISTING PAVEMENT SHALL BE TO A CLEAN STRAIGHT EDGE AS DIRECTED BY THE CITY INSPECTOR.
12. PAVEMENT REMOVAL AND REPLACEMENT SHALL BE IN CONFORMANCE WITH THE CITY OF OXNARD STANDARDS AND SPECIFICATIONS. COMPACTION EFFORTS SHALL NOT DISTURB ADJACENT STREET STRUCTURAL SECTION AND EXISTING UNDERGROUND UTILITIES. CONTRACTOR SHALL BE RESPONSIBLE FOR ANY SUCH DAMAGE.
13. ALL STREET SIGNS REMOVED FOR CONSTRUCTION SHALL BE SALVAGED AND REINSTALLED AT THE LOCATIONS SPECIFIED BY THE INSPECTOR.

STREET IMPROVEMENT ABBREVIATIONS

AC	ASPHALT CONCRETE
BC	BEGIN HORIZONTAL CURVE
C-C	CENTER-TO-CENTER
℄	CENTERLINE
CMB	CRUSHED MISCELLANEOUS BASE
COSP	CITY OF OXNARD STANDARD PLATE
EC	END HORIZONTAL CURVE
EX	EXISTING
FL	FLOWLINE
FS	FINISHED SURFACE
GB	GRADE BREAK
"H"	HUENEME ROAD, PORT HUENEME ROAD
INV	INVERT
LT	LEFT
MAX	MAXIMUM
MIN	MINIMUM
O/C	ON CENTER
PCC	POINT OF COMPOUND CURVATURE, PORTLAND CEMENT CONCRETE
R	RADIUS
RCB	REINFORCED CONCRETE BOX
RCP	REINFORCED CONCRETE PIPE
RT	RIGHT
R/W	RIGHT-OF-WAY
SPPWC	STANDARD PLANS FOR PUBLIC WORKS CONSTRUCTION
STA	STATION
TC	TOP OF CURB
TG	TOP OF GRATE
TYP	TYPICAL
VCWPD	VENTURA COUNTY WATERSHED PROTECTION DISTRICT

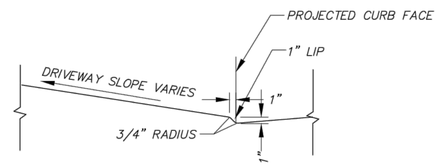

1" LIP DETAIL (W – 39)
NO SCALE

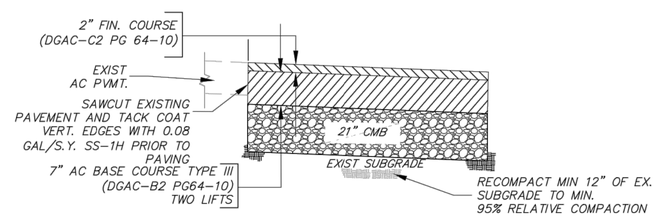

FULL AC PAVEMENT SECTION (R – 45)
NO SCALE

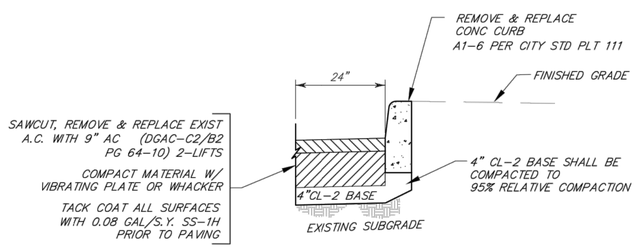

CURB REPLACEMENT DETAIL (S – 46 48)
NO SCALE

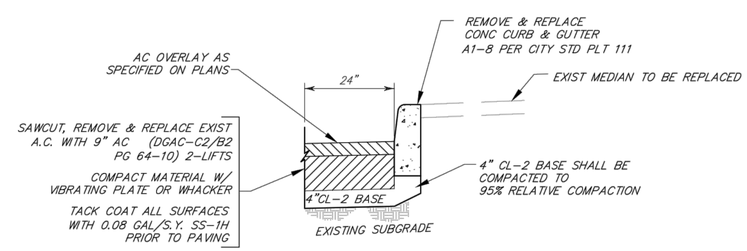

MEDIAN CURB REPLACEMENT DETAIL (T – 46 49)
NO SCALE

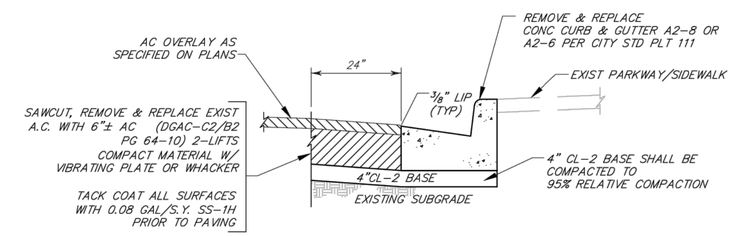

CURB & GUTTER REPLACEMENT DETAIL (U – 46 50 51)
NO SCALE

REGISTERED PROFESSIONAL ENGINEER
Michael Ip
No. 43671
Exp. 3/31/21
CIVIL
STATE OF CALIFORNIA

PLOT DATE: 8/26/20

SAVE DATE: 8/24/20 DOKTOROV, NATALIYA K:\PROJECTS\ZONE2\TSUMAS(CHUMASH)CREEK\82323_TSUMAS_CREEK_HUENEME_RD_JANE_DR\DESIGN\DESIGNDRAWINGS\FINAL_PLANS\STREET IMPROVEMENTS GENERAL NOTES.DWG

	REVISION	DESCRIPTION	APP.	DATE
D				
C				
B				
A				
△				

MNS ENGINEERS INC
ENGINEERING | SURVEYING
CONSTRUCTION MANAGEMENT
4580 E. Thousand Oaks Blvd.
Suite 101
Westlake Village, CA 91362
Phone: 805-648-4840
www.mnsengineers.com

MICHAEL IP — DESIGNED
SAM POTTS — DRAWN
ROBERT WILCOX — CHECKED
PROJECT MANAGER — DATE 8/26/2020
DEPUTY DIRECTOR — DATE
DISTRICT DIRECTOR — DATE

VENTURA COUNTY
PUBLIC WORKS AGENCY
WATERSHED PROTECTION

SPEC. NO. WP21-01
PROJ. NO. 82323

TŠUMAŠ (CHUMASH) CREEK IMPROVEMENTS
HUENEME ROAD TO UPSTREAM OF JANE DRIVE
STREET IMPROVEMENTS GENERAL NOTES AND DETAILS

SHEET 13 OF 30
DRAWING SET NO. WP-2-386

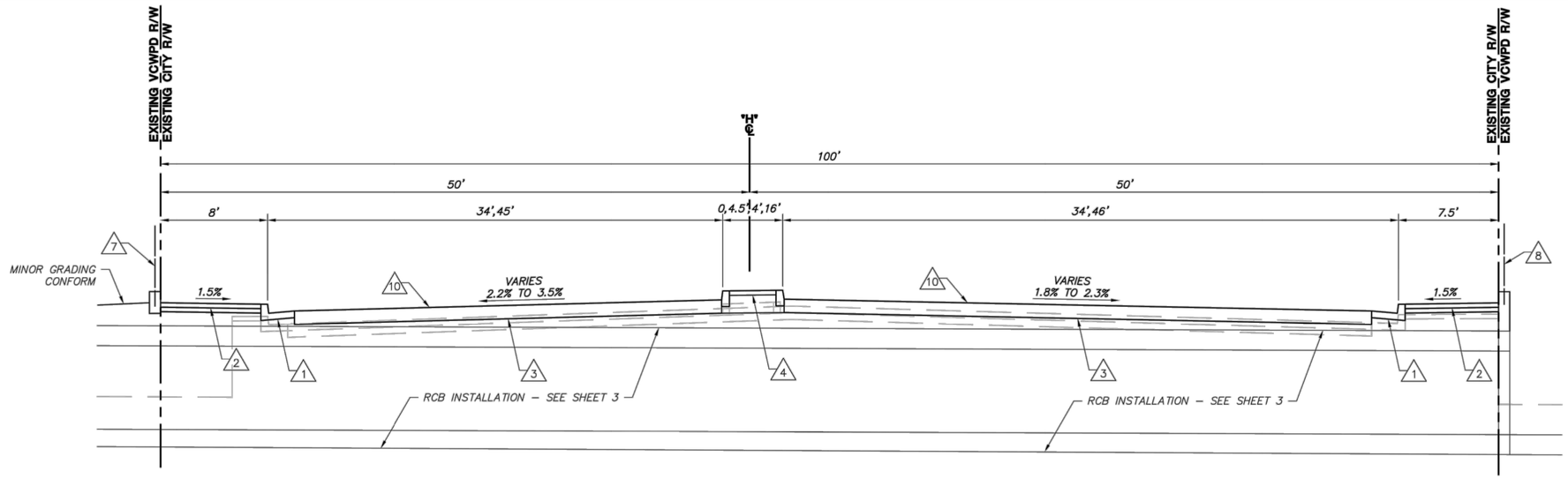

HUENEME ROAD

NOT TO SCALE

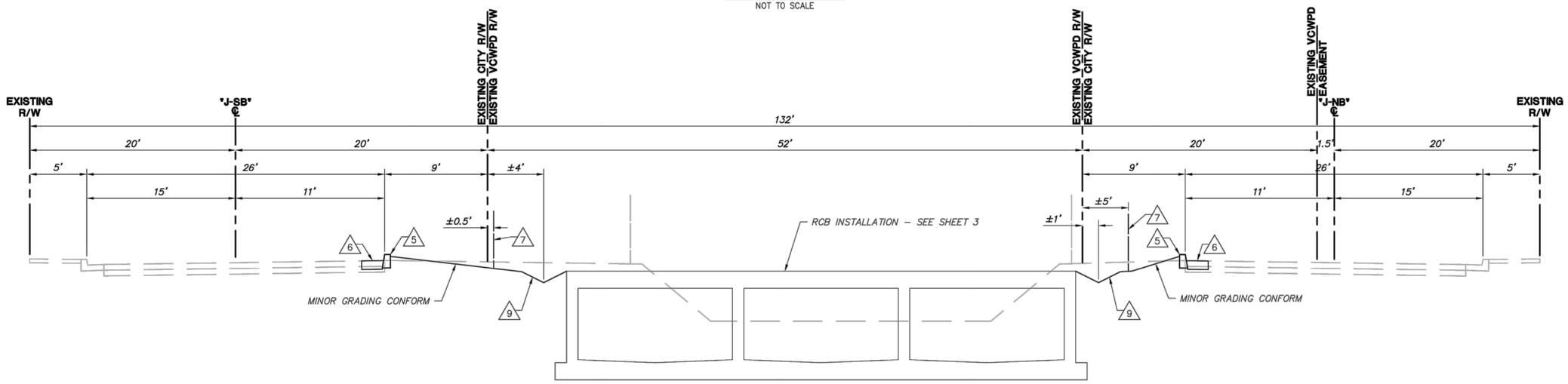

J STREET

NOT TO SCALE

CONSTRUCTION NOTES

1	CONSTRUCT TYPE A2–8 CURB AND GUTTER COSP 111 PER DETAIL	U/13	51
2	CONSTRUCT 4" THICK SIDEWALK OVER 4" CMB PER COSP 112 AND 113	52	
3	CONSTRUCT 9" AC (BASE COURSE TYPE III B2 PG 64–10, FINISH COURSE TYPE III C2 PG 64–10) OVER 21" CMB PER DETAIL (VARIABLE THICKNESS CMB OVER RCB) – SEE SHEET 15 FOR LIMITS	R/13	44
4	CONSTRUCT TYPE A1–8 CURB PER COSP 111 AND STAMPED CONCRETE IN MEDIAN PER COSP 128 PER DETAIL	T/13	48, 49, 56
5	CONSTRUCT TYPE A1–6 CURB PER COSP 111 PER DETAIL	S/13	48
6	CONSTRUCT 9" AC (BASE COURSE TYPE III B2 PG 64–10, FINISH COURSE TYPE III C2 PG 64–10) PER DETAIL	S/13	46
7	CONSTRUCT FENCE PER SHEET 12	40	
8	CONSTRUCT FENCE PER SHEET 12 ON PARAPET PER SHEET 4	40	
9	SITE DRAINAGE IMPROVEMENTS – SEE SHEET 3	14, 30, 69	
10	COLD MILL AND OVERLAY – SEE SHEET 15 FOR LIMITS	47	

REGISTERED PROFESSIONAL ENGINEER
Michael Ip
No. 43671
Exp. 8/31/21
CIVIL
STATE OF CALIFORNIA

PLOT DATE: 8/26/20

SAVE DATE: 8/24/20 DOKTOROV, NATALIYA K:\PROJECTS\ZONE2\TSUMAS(CHUMASH)CREEK\82323_TSUMAS_CREEK_HUENEME_RD_JANE_DR\DESIGN\DESIGNDRAWINGS\FINAL_PLANS\STREET IMPROVEMENTSTYPICAL SECTIONS.DWG

	REVISION	DESCRIPTION	APP.	DATE
D				
C				
B				
A				
△				

MNS ENGINEERS INC
ENGINEERING | SURVEYING
CONSTRUCTION MANAGEMENT
4580 E. Thousand Oaks Blvd.
Suite 101
Westlake Village, CA 91362
Phone: 805–648–4840
www.mnsengineers.com

MICHAEL IP — DESIGNED
SAM POTTS — DRAWN
ROBERT WILCOX — CHECKED

PROJECT MANAGER — DATE 8/26/2020
DEPUTY DIRECTOR — DATE
DISTRICT DIRECTOR — DATE

VENTURA COUNTY
PUBLIC WORKS AGENCY
WATERSHED PROTECTION

SPEC. NO. WP21–01
PROJ. NO. 82323

TŠUMAŠ (CHUMASH) CREEK IMPROVEMENTS
HUENEME ROAD TO UPSTREAM OF JANE DRIVE
STREET IMPROVEMENTS TYPICAL SECTIONS

SHEET 14 OF 30
DRAWING SET NO. WP–2–386

CONSTRUCTION NOTES

1. CONSTRUCT TYPE A1-6 CURB PER COSP 111 PER DETAIL (S/13) (48)
2. CONSTRUCT TYPE A2-8 CURB AND GUTTER PER COSP 111 PER DETAIL (U/13) (51)
3. CONSTRUCT TYPE A1-8 CURB PER COSP 111 PER DETAIL (T/13) (49)
4. CONSTRUCT TYPE A2-6 CURB AND GUTTER PER COSP 111 PER DETAIL (U/13) (50)
5. CONSTRUCT 4" THICK SIDEWALK OVER 4" CMB PER COSP 112 AND 113. (52)
6. CONSTRUCT COMMERCIAL DRIVEWAY PER SPPWC 110-2 (TYPE C, W=28', 7" THICK PCC) WITH ACCESS ROAD DOUBLE LEAF GATE PER SHEET 12 (W=32') (39) (41)
7. CONSTRUCT MODIFIED COMMERCIAL DRIVEWAY PER SPPWC 110-2 (TYPE B, W PER PLAN, Y=3.5', 7" THICK PCC) WITH 1" LIP PER DETAIL (W/13) (39)
8. CONSTRUCT CURB RAMP PER COSP 110 AND SHEET 16 (53)
9. CONSTRUCT PEDESTRIAN BARRICADE PER STATE STANDARD PLAN ES-7Q (TYPE I, W PER PLAN) (54)
10. CONSTRUCT MODIFIED TYPE A ISLAND PASSAGEWAY PER STATE STANDARD PLAN A88B AND DETAIL ON SHEET 16 (55)
11. CONSTRUCT 9" AC (BASE COURSE TYPE III B2 PG 64-10, FINISH COURSE TYPE III C2 PG 64-10) OVER 21" CMB PER DETAIL (APPROX 10" THICK CMB TO TOP OF RCB) (R/13) (44) (45)
12. CONSTRUCT 9" AC (BASE COURSE TYPE III B2 PG 64-10, FINISH COURSE TYPE III C2 PG 64-10) PER DETAIL (S/13) (46)
13. 2" COLD MILL AND VARIABLE AC OVERLAY (47)
14. CONSTRUCT STAMPED CONCRETE IN MEDIAN PER COSP 128 (57)
15. EXISTING STREET LIGHT TO BE REMOVED AND REPLACED BY OTHERS
16. CONSTRUCT FENCE PER SHEET 12 (40)
17. CONSTRUCT ACCESS ROAD SINGLE LEAF GATE PER SHEET 12 (W PER PLAN) (42) (43)
18. CONSTRUCT CATCH BASIN PER SHEET 10 (27) (29)
19. SITE DRAINAGE FACILITY – SEE SHEET 3
20. SAWCUT LINE (2' MIN WIDTH) (48) (49) (50) (51) (52) (53)
21. COLD MILL AND AC OVERLAY LIMITS (47)
22. EXISTING UTILITY BOXES, COORDINATE ADJUSTMENT TO GRADE WITH OWNERS. (7)
23. TRAFFIC SIGNAL FACILITY – SEE SHEET 17 FOR DISPOSITION (58) (71)
24. INSTALL 6" CMB ROAD PER PLAN (5)
25. CONSTRUCT PARAPET PER "PARAPET HEADWALL DETAIL – 1" ON SHEET 4 (15) (17)
26. CONSTRUCT PARAPET PER "PARAPET HEADWALL DETAIL – 2" ON SHEET 4 (15) (16) (17) (18)
27. SEE SHEET 26 FOR RETAINING WALL "A" DETAIL (Z1/26) (73)
28. SEE SHEET 26 FOR RETAINING WALL "B" DETAIL (Z2/26) (72)
29. PARAPET ABUTS RETAINING WALL (17) (19)

LEGEND

11 — 12 — 13 — 24

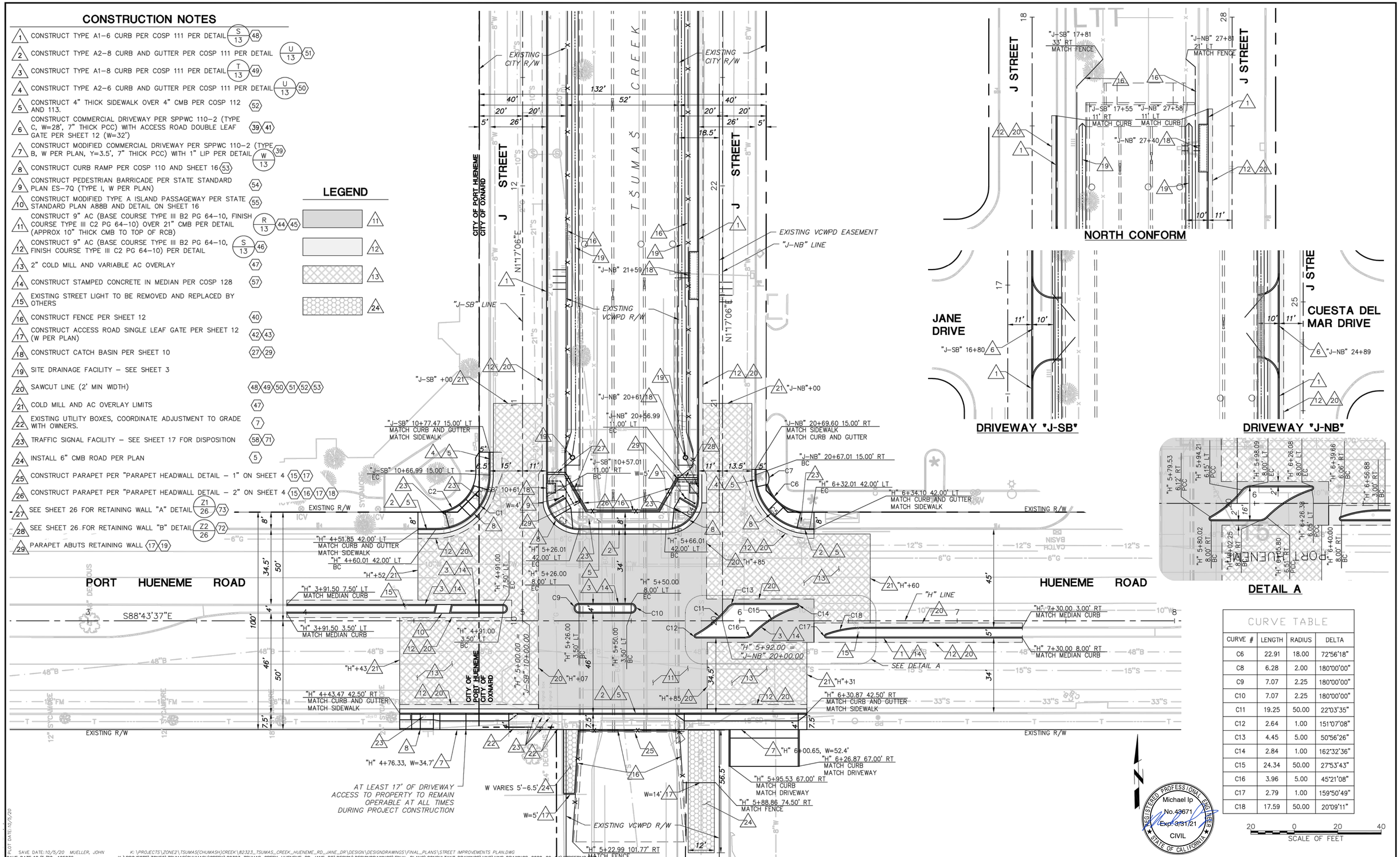

CURVE TABLE

CURVE #	LENGTH	RADIUS	DELTA
C6	22.91	18.00	72°56'18"
C8	6.28	2.00	180°00'00"
C9	7.07	2.25	180°00'00"
C10	7.07	2.25	180°00'00"
C11	19.25	50.00	22°03'35"
C12	2.64	1.00	151°07'08"
C13	4.45	5.00	50°56'26"
C14	2.84	1.00	162°32'36"
C15	24.34	50.00	27°53'43"
C16	3.96	5.00	45°21'08"
C17	2.79	1.00	159°50'49"
C18	17.59	50.00	20°09'11"

REGISTERED PROFESSIONAL ENGINEER
Michael Ip
No. 43671
Exp. 3/31/21
CIVIL
STATE OF CALIFORNIA

PLOT DATE: 10/5/20

SAVE DATE: 10/5/20 MUELLER, JOHN K:\PROJECTS\ZONE2\TSUMAS(CHUMASH)CREEK\82323_TSUMAS_CREEK_HUENEME_RD_JANE_DR\DESIGN\DESIGNDRAWINGS\FINAL_PLANS\STREET IMPROVEMENTS PLAN.DWG
SAVE DATE: 10/5/20 125936 K:\PROJECTS\ZONE2\TSUMAS(CHUMASH)CREEK\82323_TSUMAS_CREEK_HUENEME_RD_JANE_DR\DESIGN\DESIGNDRAWINGS\FINAL_PLANS\CONSULTANT DRAWINGS\MNS\MNS DRAWINGS_2020-06-24\STREETIMP.MNS

REVISION	DESCRIPTION	APP.	DATE
D			
C			
B			
A			
△			

MNS ENGINEERS INC
ENGINEERING | SURVEYING
CONSTRUCTION MANAGEMENT
4580 E. Thousand Oaks Blvd.
Suite 101
Westlake Village, CA 91362
Phone: 805-648-4840
www.mnsengineers.com

MICHAEL IP (DESIGNED)	PROJECT MANAGER	10/05/2020 DATE
SAM POTTS (DRAWN)	DEPUTY DIRECTOR	10/7/20 DATE
ROBERT WILCOX (CHECKED)	DISTRICT DIRECTOR	10/7/20 DATE

VENTURA COUNTY PUBLIC WORKS AGENCY WATERSHED PROTECTION

SPEC. NO. WP21-01
PROJ. NO. 82323

TŠUMAŠ (CHUMASH) CREEK IMPROVEMENTS HUENEME ROAD TO UPSTREAM OF JANE DRIVE

STREET IMPROVEMENT PLAN

SHEET 15 OF 30
DRAWING NO. WP-2-386

ADDENDUM NO. 2

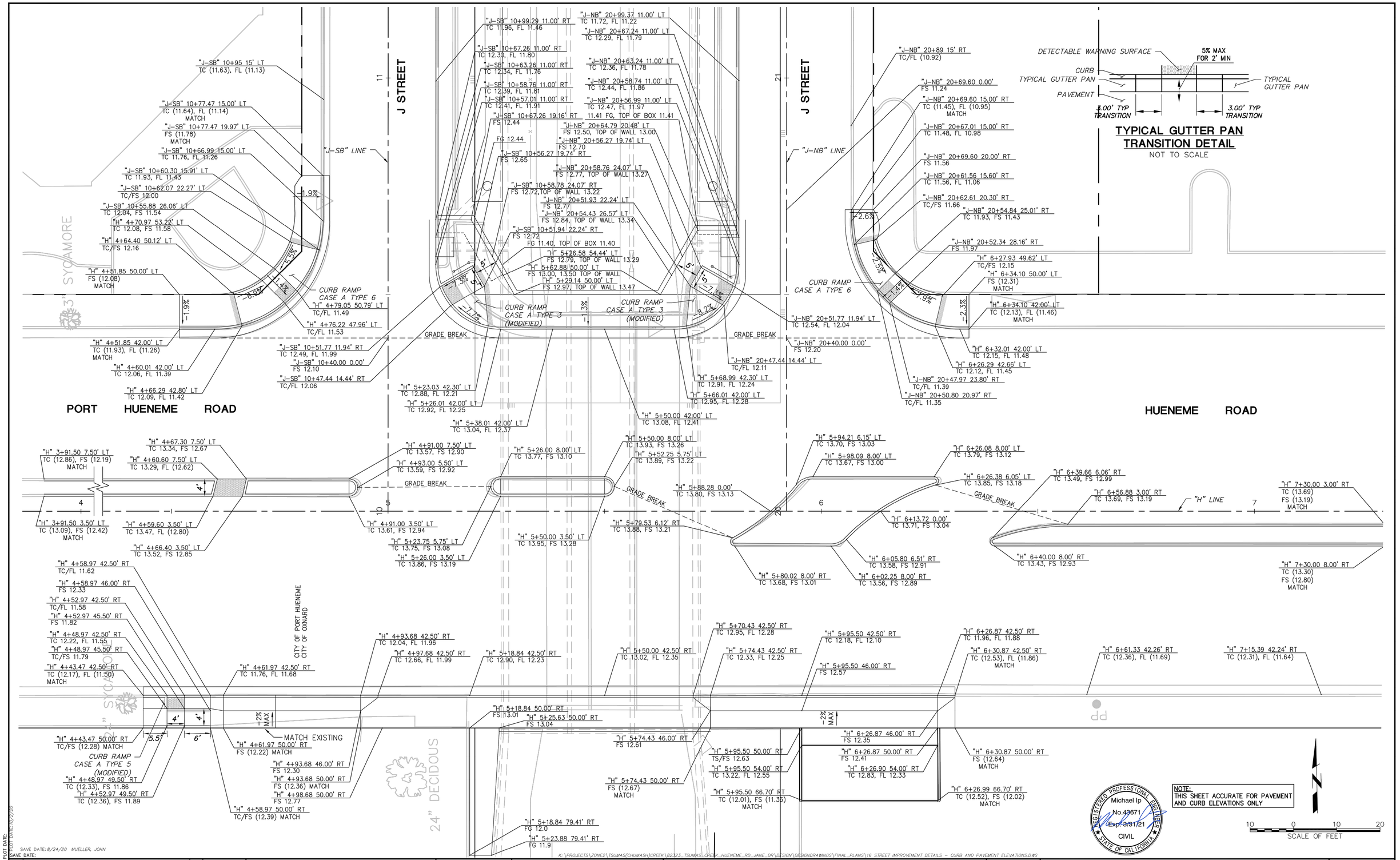

PLOT DATE: 10/2/20

SAVE DATE: 8/24/20 MUELLER, JOHN

K:\PROJECTS\ZONE2\TSUMAS(CHUMASH)CREEK\82323_TSUMAS_CREEK_HUENEME_RD_JANE_DR\DESIGN\DESIGNDRAWINGS\FINAL_PLANS\16 STREET IMPROVEMENT DETAILS - CURB AND PAVEMENT ELEVATIONS.DWG

	REVISION	DESCRIPTION	APP.	DATE
D				
C				
B				
A				

MNS ENGINEERS INC
ENGINEERING | SURVEYING
CONSTRUCTION MANAGEMENT

4580 E. Thousand Oaks Blvd.
Suite 101
Westlake Village, CA 91362
Phone: 805-648-4840
www.mnsengineers.com

MICHAEL IP — DESIGNED
SAM POTTS — DRAWN
ROBERT WILCOX — CHECKED

PROJECT MANAGER — DATE 10/05/2020
DEPUTY DIRECTOR — DATE 10/7/20
DISTRICT DIRECTOR — DATE 10/7/20

VENTURA COUNTY PUBLIC WORKS AGENCY WATERSHED PROTECTION

SPEC. NO. WP21-01
PROJ. NO. 82323

TŠUMAŠ (CHUMASH) CREEK IMPROVEMENTS HUENEME ROAD TO UPSTREAM OF JANE DRIVE

STREET IMPROVEMENT DETAILS - CURB AND PAVEMENT ELEVATIONS

SHEET 16 OF 30
DRAWING NO. WP-2-386

ADDENDUM NO. 2

POLE AND EQUIPMENT SCHEDULE△

POLE	STANDARDS					VEH. SIGNAL MTG.		PED. SIG.	P.P.B.		POLE LOC.			H.P.S.V.	MAST ARM MOUNTED INTERNALLY ILLUMINATED	COMMENTS
	YEAR STD.	TYPE	HEIGHT	SIGNAL M.A.	LUMIN. M.A.	MAST ARM	POLE	MTG.	ø	QUAD	E	B	C	Luminare		
Ⓐ	1988	18-2-80 (E)	17'	25'	–	MAS	SV-2-T (E)	–	–	–	EXISTING			–	J STREET (E)	10
Ⓑ	1988	1-A (RL)	10'	–	–	–	TV-2-T	SP-1-T	4	2	AS SHOWN			–	–	–
Ⓒ	1988	1-A (RL)	10'	–	–	–	TV-1-T (N)	SP-1-T (N)	–	–	3'	–	6.5'	–	–	–
ⒸⒹ	2018	PPB-POST (N)	4'-7"	–	–	–	–	–	4/6	2/3	–	M.C.	7'	–	–	–
Ⓓ	2018	1-A (N)	10'	–	–	–	TV-1-T	SP-1-T	–	–	–	4'	5'	–	–	–
Ⓔ	2018	23-3-100 (N)	17'	35'	–	MAS	–	–	–	–	2.5'	–	2.5'	–	J STREET RL	–
Ⓕ	2018	1-A (N)	10'	–	–	–	TV-1-T	TP-1-T	6	1	–	1.5'	3'	–	–	–
Ⓖ	1988	1-A (RL)	7'	–	–	–	–	TP-1-T	6	4	–	-1'	7.5'	–	–	9
Ⓗ	1988	1-A (E)	10'	–	–	–	TV-2-T (E)	SP-1-T (E)	6	1	EXISTING			–	–	10

ALL EQUIPMENT IS NEW, UNLESS NOTED (N)=NEW, (RL)=RELOCATED, (E)=EXISITNG
△ EXACT POLE LOCATIONS DETERMINED BY FIELD ENGINEER; POTHOLE POLE FOUNDATIONS PRIOR TO ORDERING POLES.

SIGN LEGEND:

R3-2 36"X36"

TRUCK ROUTE
R14-1(MOD) 36"X45"

EXISTING PHASE DIAGRAM

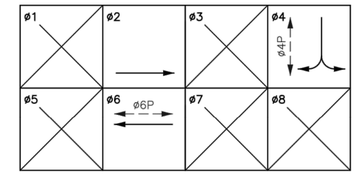

CONDUCTOR SCHEDULE

AWG SIZE OR CABLE TYPE	POLE OR CIRCUIT	CONDUIT RUN NUMBER (E) 1	(N) 2	(N) 3	(N) 4	(N) 5	(N) 6	(N) 7	(N) 8
12 CONDUCTOR / 3 CONDUCTOR	POLE - Ⓐ	1	–	–	–	–	–	–	–
	Ⓑ	1	1	1	–	–	–	–	–
	Ⓒ	1	–	1	–	–	–	–	–
	ⒸⒹ	–	2	2	2	–	–	–	–
	Ⓓ	1	–	1	–	1	–	–	–
	Ⓔ	1	–	1	–	1	–	–	–
	Ⓕ	1	1	1	1	1	1	–	–
	Ⓖ	1	1	1	1	1	1	1	–
	Ⓗ	1	1	1	1	1	1	1	1
	TOTAL	8	6	7	6	5	3	4	3
#12	I.I.S.N.S.	2	2	2	2	2	–	–	–
#10	LUMINAIRES	–	–	–	–	–	–	–	–
DLC (TYPE "B")	ø2	3	3	–	–	–	–	–	–
	ø4	2	2	2	2	–	–	–	–
	ø6	3	3	3	3	3	3	3	3
	TOTAL	8	8	5	5	3	3	3	3
GPS CABLE		–	–	–	–	–	–	–	–
EVP CABLE		–	–	–	–	–	–	–	–
CONDUIT SIZE		3"	3"	3"	3"	3"	3"	3"	2"
% FILL		61	55	46	37	30	46	22	22

ALL CONDUCTORS SHALL BE NEW

GENERAL TRAFFIC SIGNAL NOTES:

1. ALL TRAFFIC SIGNAL WORK, EQUIPMENT AND MATERIALS SHALL CONFORM TO THE STATE OF CALIFORNIA, DEPARTMENT OF TRANSPORTATION (CALTRANS) STANDARD PLANS AND SPECIFICATIONS, AS MOST RECENTLY REVISED AND THE CITY OF OXNARD TRAFFIC SIGNAL SPECIFICATIONS, UNLESS OTHERWISE NOTED.
2. THE EXISTENCE AND LOCATION OF UNDERGROUND UTILITY PIPES OR STRUCTURES SHOWN ON THESE PLANS WERE MADE BY A SEARCH OF THE RECORDS, HOWEVER, NO GUARANTEE IS MADE REGARDING THEIR EXISTENCE OR THAT THE LOCATIONS SHOWN ARE EXACT. THE CONTRACTOR SHALL TAKE ALL DUE PRECAUTIONARY MEASURES TO PROTECT ALL UTILITY LINES INCLUDING THOSE NOT SHOWN OR THOSE NOT OF RECORD. CALL "UNDERGROUND SERVICE ALERT" 811 PRIOR TO ANY EXCAVATION. THE CONTRACTOR SHALL BEAR THE TOTAL EXPENSE OF REPAIR OR REALIGNMENT OF ANY UNDERGROUND UTILITIES DAMAGED BY HIS OPERATIONS.
3. A MINIMUM OF TWO WORKING DAYS BEFORE BEGINNING CONSTRUCTION, THE CONTRACTOR SHALL NOTIFY UNDERGROUND SERVICE ALERT (USA) AT 811 TO REQUEST UTILITY OWNERS TO MARK OR OTHERWISE INDICATE THE LOCATION AND DEPTH OF ALL SUBSURFACE FACILITIES THAT HAVE BEEN MARKED BY THEIR RESPECTIVE OWNERS AND THAT MAY BE AFFECTED BY THE CONTRACTOR OPERATIONS. THE CONTRACTOR SHALL BEAR THE EXPENSE OF REPAIR OR REPLACEMENT OF ANY UNDERGROUND UTILITIES DAMAGED BY HIS OPERATION.
4. THE CONTRACTOR SHALL VERIFY WITH THE CITY TRAFFIC ENGINEER THE PRECISE FIELD LOCATIONS FOR ALL TRAFFIC SIGNAL EQUIPMENT PRIOR TO INSTALLATION.
5. ALL NEW PULL BOXES SHALL BE NO. 6 UNLESS OTHERWISE SPECIFIED.
6. CONDUITS SHALL BE 4" HDPE SCHEDULE 80, UNLESS OTHERWISE SPECIFIED. ALL INTERCONNECT CONDUITS SHALL BE 4" MINIMUM, UNLESS APPROVED BY THE CITY, AND SHALL HAVE A SWEEP OF 45 DEGREES OR LESS INTO ALL PULL BOXES.
7. ALL SIGNAL HEADS SHALL BE 12" POLYCARBONITE. ALL BACKPLATES SHALL BE METAL.
8. ALL VEHICLE INDICATIONS SHALL BE LED PER CITY STANDARDS.
9. ALL PEDESTRIAN INDICATIONS SHALL BE COUNTDOWN LED PER CITY STANDARDS.
10. LUMINAIRES SHALL BE LED.
11. CONTRACTOR SHALL COORDINATE TRAFFIC SIGNAL WORK WITH OTHER CONTRACTOR(S) DURING DEMOLITION AND CONSTRUCTION OF STREET IMPROVEMENTS.
12. SERVICE POWER SOURCE AT EDISON VAULT. ARRANGE WITH EDISON SERVICE PLANNER; BRIAN DEPPEN (805) 654-7215.
13. CONTRACTOR SHALL COORDINATE SIGNAL TURN ON WITH THE CITY TRAFFIC ENGINEER.
14. LOOPING SIGNAL CONDUCTORS UP AND DOWN POLES SHALL NOT BE PERMITTED. SPLICES ARE ALLOWED IN PULL BOXES ONLY.
15. ALL PEDESTRIAN PUSH BUTTONS SHALL COMPLY WITH AMERICANS WITH DISABILITIES ACT (ADA) REQUIREMENTS.
16. ALL SIGNAL EQUIPMENT SHALL BE MARKED (TAGGED) WITHIN THE CONTROLLER CABINET FOR PHASE IDENTIFICATION.
17. ALL NEW SIGNAL CABLES SHALL BE CONTINUOUS AND TERMINATED AT THE TERMINAL BLOCKS (SIGNAL POLE AND THE CABINET).
18. ALL SIGNS SHALL BE STANDARD SIZE FOR CONVENTIONAL ROADS PER THE LATEST CAL TRANS SIGN SPECIFICATIONS UNLESS OTHERWISE SPECIFIED AND SHALL HAVE MINIMUM 3M HIGH-INTENSITY PRISMATIC RETRO-REFLECTIVE SHEETING.
19. DETECTOR LOOPS SHALL BE 6' DIAMETER (TYPE "E"). EACH LOOP ASSIGNMENT SHALL HAVE A SEPARATE LEAD-IN CABLE TO CONTROLLER.
20. ALL UNUSED SIGNAL ARM TENONS MUST BE CAPPED.
21. ALL CROSSWALK AND LIMIT LINE WORK SHALL BE INSTALLED PRIOR TO SIGNAL TURN ON.
22. ANY MODIFICATIONS OF OR CHANGES TO APPROVED PLANS MUST BE APPROVED BY THE CITY TRAFFIC ENGINEER.
23. COMMUNICATION (FIBER OPTIC) CONDUIT AND CABLE SHALL BE ISOLATED FROM TRAFFIC SIGNAL SYSTEM.

CONSTRUCTION NOTES:

1. EXISTING MODEL 170ATC CONTROLLER ASSEMBLY AND AUXILIARY EQUIPMENT IN A MODEL 332 CABINET.
2. EXISTING TYPE III-BF SERVICE WITH 50 AMP METERED SIGNAL CIRCUIT, 15 AMP METERED I.I.S.N.S. CIRCUIT, 30 AMP UNMETERED LIGHTING CIRCUIT.
3. REMOVE EXISTING TRAFFIC SIGNAL POLE WITH FOUNDATION, COMPLETE. ALL EXISTING EQUIPMENT AND SIGNS, MINUS PUSH-BUTTON ASSEMBLY, SHALL BE RELOCATED TO THE NEW TRAFFIC SIGNAL POLE Ⓔ.
4. RELOCATE EXISTING TRAFFIC SIGNAL POLE WITH ALL EXISTING EQUIPMENT AND SIGNS TO NEW LOCATION AS SHOWN PER PLAN. EXISTING PUSH-BUTTON ASSEMBLY SHALL BE REMOVED AND HOLE PLUGGED TO THE APPROVAL OF THE CITY.
5. REMOVE TEMPORARY STEEL PLATE AND INSTALL EXISTING TRAFFIC SIGNAL POLE WITH ALL EXISTING EQUIPMENT AND SIGNS TO NEW LOCATION AS SHOWN PER PLAN. EXISTING PUSH-BUTTON ASSEMBLY SHALL BE RELOCATED TO THE OPPOSITE SIDE OF POLE WITH NEW DIRECTIONAL PLAQUE. REMAINING HOLE(S) SHALL BE PLUGGED TO THE APPROVAL OF THE CITY.
6. RELOCATE EXISTING TRAFFIC SIGNAL POLE WITH ALL EXISTING EQUIPMENT AND SIGNS TO NEW LOCATION AS SHOWN PER PLAN.
7. INSTALL RELOCATED MAST ARM SIGNS AS SHOWN PER PLAN.
8. EXISTING 2"C: 2(#6) FOR SERVICE, AND 4(#12).
9. CONTRACTOR IS TO ROTATE EXISTING PUSH BUTTON ASSEMBLY TO NEW ORIENTATION. HOLES ARE TO BE PROPERLY SEALED TO THE SATISFACTION OF THE CITY ENGINEER.
10. TRAFFIC SIGNAL POLE AND ADJACENT SIGNAL EQUIPMENT SHALL BE ADJUSTED TO GRADE, AS PER THE PROJECT STREET IMPROVEMENT PLANS.

AB TO BE ABANDONED. IF APPLIED TO CONDUIT, REMOVE CABLES/CONDUCTORS.
CB CONNECT NEW CONDUIT INTO EXISTING PULLBOX. REMOVE EXISTING CONDUCTORS AND INSTALL CONDUCTORS AS INDICATED.
CC CONNECT NEW AND EXISTING CONDUIT. REMOVE EXISTING CONDUCTORS AND INSTALL CONDUCTORS AS INDICATED.
RL RELOCATE EQUIPMENT.
RR REMOVE AND REUSE EQUIPMENT.
RS REMOVE AND SALVAGE EQUIPMENT.

DRAWING LEGEND:

- PROPOSED TYPE E LOOP DETECTOR
- EXISTING TYPE E LOOP DETECTOR
- REMOVED TYPE E LOOP DETECTOR
- PROPOSED MAST ARM SIGN
- EXISTING MAST ARM SIGN
- REMOVED MAST ARM SIGN
- PROPOSED CONDUIT
- EXISTING CONDUIT
- REMOVED/ABANDONED CONDUIT
- PROPOSED PULL BOX
- EXISTING PULL BOX
- REMOVED PULL BOX
- EXISTING SERVICE CABINET
- EXISTING CONTROLLER CABINET
- PROPOSED VEHICLE HEAD
- EXISTING VEHICLE HEAD
- REMOVED VEHICLE HEAD
- PROPOSED PEDESTRIAN HEAD
- EXISTING PEDESTRIAN HEAD
- REMOVED PEDESTRIAN HEAD

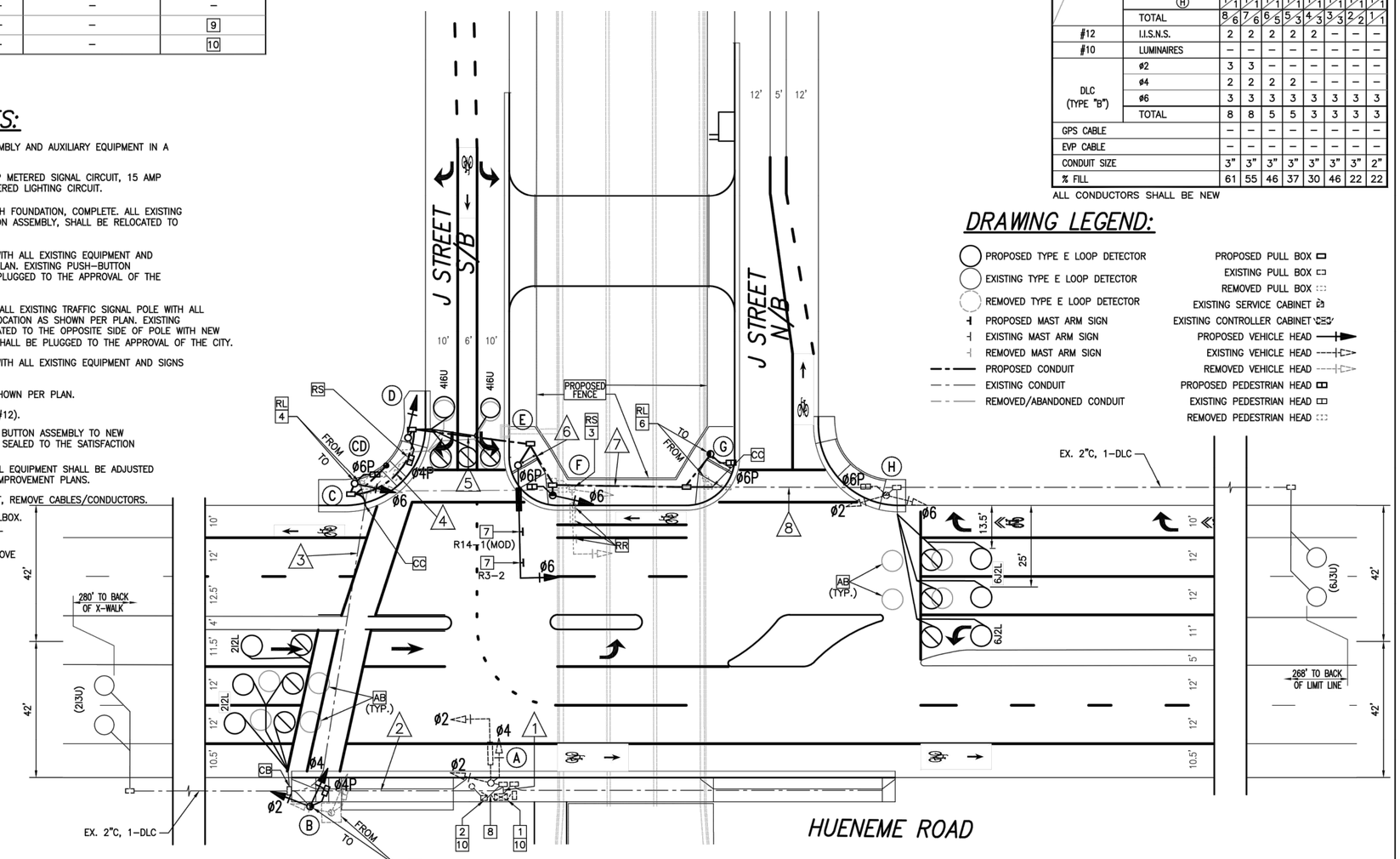

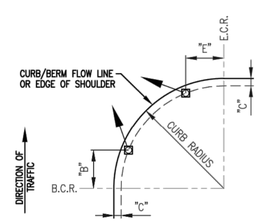

NOTE: FOR "A" AND "B" DIMENSIONS, SEE POLE SCHEDULE OR AS DIRECTED BY ENGINEER

(TYPICAL SIGNAL POLE PLACEMENT, UNLESS SHOWN ON PLANS)

SIGNAL STANDARD PLACEMENT DIMENSIONS AND EQUIPMENT LOCATIONS

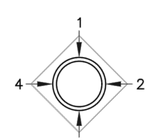

QUADRANT DETAIL
PEDESTRIAN/EQUESTRIAN PUSH BUTTON LOCATION (TOP VIEW)

SCALE OF FEET

REGISTERED PROFESSIONAL ENGINEER THOMAS JOSEPH WHEAT No. 74847 Exp. 6/30/22 CIVIL STATE OF CALIFORNIA

PLOT DATE: 8/21/20
SAVE DATE: 8/24/20 DOKTOROV, NATALIYA K:\PROJECTS\ZONE2\TSUMAS(CHUMASH)CREEK\82323_TSUMAS_CREEK_HUENEME_RD-JANE_DR\DESIGN\DESIGNDRAWINGS\FINAL_PLANS\17 TRAFFIC SIGNAL MODIFICATION PLAN.DWG
SAVE DATE: 8/21/20 STEVE ZEVALLOS C:\USERS\STEVE ZEVALLOS\DROPBOX (TJW ENGINEERING INC.)\TJW PROJECTS\MNS PROJECTS\MNS-18-004\MNS18004 TS C.DWG

	REVISION	DESCRIPTION	APP.	DATE
D				
C				
B				
A				
△				

TJW ENGINEERING, INC.
Traffic Engineering & Transportation Planning Consultants
6 Venture, Suite 225, Irvine, CA 92618
t: (949) 878-3509 f: (949) 878-3593
www.tjwengineering.com

STEVE ZEVALLOS — DESIGNED
STEVE ZEVALLOS — DRAWN
THOMAS WHEAT — CHECKED

WATERSHED PROJECT MANAGER — DATE 8/26//2020
WATERSHED DEPUTY DIRECTOR — DATE
WATERSHED DIRECTOR — DATE

VENTURA COUNTY PUBLIC WORKS AGENCY WATERSHED PROTECTION

SPEC. NO. WP21-01
PROJ. NO. 82323

TŠUMAŠ (CHUMASH) CREEK IMPROVEMENTS HUENEME ROAD TO UPSTREAM OF JANE DRIVE

TRAFFIC SIGNAL MODIFICATION PLAN

SHEET 17 OF 30
DRAWING SET NO. WP-2-386

TRAFFIC CONTROL GENERAL NOTES

1. THE CITY OF OXNARD AND THE CITY OF PORT HUENEME RESERVE THE RIGHT TO OBSERVE THESE TRAFFIC CONTROL DRAWINGS IN USE WITHIN THEIR JURISDICTION AND TO MAKE ANY NECESSARY CHANGES AS FIELD CONDITIONS WARRANT. ANY CHANGES REQUESTED BY THE CITY OF OXNARD OR THE CITY OF PORT HUENEME SHALL SUPERCEDE THESE DRAWINGS. FIELD CHANGES, OTHER THAN MINOR ADJUSTMENTS APPROVED BY THE CITY'S INSPECTOR OR OTHER AUTHORIZED AGENT, MUST BE AUTHORIZED IN WRITING BY THE CITY OF OXNARD TRANSPORTATION SERVICES MANAGER OR CITY TRAFFIC ENGINEER. SIGNIFICANT CHANGES WILL BE HANDLED AS EXTRA WORK.
2. ALL WORK TO BE DONE IS SUBJECT TO THE TERMS AND CONDITIONS AND SPECIAL CONDITIONS SET FORTH IN THE CITY-ISSUED ENCROACHMENT PERMIT(S). IN CASE OF CONFLICT BETWEEN THE ENCROACHMENT PERMIT AND THESE TRAFFIC CONTROL DRAWINGS, THE MORE STRINGENT REQUIREMENT SHALL GOVERN.
3. IT IS THE RESPONSIBILITY OF THE CONTRACTOR TO INSTALL THE TRAFFIC CONTROL DEVICES AS SHOWN HERON, AS WELL AS ANY ADDITIONAL TRAFFIC CONTROL DEVICES AS MAY BE REQUIRED TO ENSURE THE SAFE MOVEMENT OF TRAFFIC AND PEDESTRIANS THROUGH OR AROUND THE WORK ZONE, AND PROVIDE MAXIMUM PROTECTION AND SAFETY TO CONSTRUCTION WORKERS.
4. ALL TRAFFIC CONTROL DEVICES, STRIPES, MARKING, LEGENDS, AND RAISED PAVEMENT MARKERS AND THEIR PLACEMENT SHALL CONFORM TO THE LATEST EDITION OF THE CALIFORNIA MANUAL ON UNIFORM TRAFFIC CONTROL DEVICES (CA-MUTCD). THE SOUTHERN CALIFORNIA CHAPTER APWA "WORK AREA TRAFFIC CONTROL HANDBOOK" (WATCH MANUAL) MAY BE REFERRED TO AS A SUPPLEMENT TO THE CALIFORNIA MUTCD .
5. PLAN IMPLEMENTATION AND DEVICE PLACEMENT SHALL BE PERFORMED BY TRAINED PERSONNEL.
6. LOCATION OF SIGNS SHOWN ON THE PLANS ARE APPROXIMATE. ADJUSTMENTS TO LOCATIONS OF SIGNS MAY BE REQUIRED TO SUIT FIELD CONDITIONS OR AS DIRECTED BY THE ENGINEER.
7. IT IS THE RESPONSIBILITY OF THE CONTRACTOR PERFORMING WORK ON A PUBLIC STREET TO INSTALL AND MAINTAIN CONTROL DEVICES AS SHOWN HEREON, AS WELL AS ANY SUCH ADDITIONAL DEVICES AS MAY BE REQUIRED TO INSURE THE SAFE MOVEMENT OF TRAFFIC AND PEDESTRIANS THROUGH OR AROUND THE WORK AREA. ALL TRAFFIC CONTROL DEVICES SHALL BE KEPT IN THEIR PROPER POSITION AT ALL TIMES, AND SHALL BE REPAIRED, REPLACED OR CLEANED AS NECESSARY TO PRESERVE THEIR APPEARANCE AND CONTINUITY.
6. ALL SIGNS SHALL BE STANDARD SIZE AND REFLECTORIZED AS LISTED IN ACCORDANCE WITH TABLE 6F-1 OF THE CA-MUTCD.
7. UNLESS OTHERWISE SHOWN ON THE PLAN THE COLOR OF CONSTRUCTION SIGNS SHALL HAVE A BLACK LEGEND AND BORDER ON ORANGE BACKGROUND.
8. CHANNELIZERS SHALL BE MINIMUM 36" HEIGHT AND INCLUDE HIGH-INTENSITY REFLECTORIZED SHEETING.
9. CONES SHALL BE MINIMUM 28" HEIGHT AND INCLUDE 13" HIGH-INTENSITY REFLECTORIZED SLEEVE.
10. TEMPORARY LANE SEPARATORS SHALL COMPLY WITH SECTION 6F.72 OF THE CA-MUTCD.
11. CONTRACTOR SHALL PROVIDE TYPE B HIGH-INTENSITY FLASHING BEACONS/WARNING LIGHTS ON ALL W20-1 SIGNS AND ON TYPE III BARRICADES NEAR ACTIVE WORK AREAS.
12. USE AND PLACEMENT OF FLASHING ARROW BOARD SIGNS SHALL BE AS SHOWN ON THE PLAN AND AS DIRECTED BY THE ENGINEER. ALL TRAFFIC TRANSITIONS SHALL UTILIZE ARROW BOARDS.
13. CONTRACTOR SHALL POST ADVANCE NOTICE ELECTRONIC PORTABLE CHANGEABLE MESSAGE SIGNS (PCMS) ON EACH SIDE OF CONSTRUCTION A MINIMUM OF FIVE (5) WORKING DAYS IN ADVANCE TO ANY ROAD/LANE CLOSURES PER THESE PLANS AND AS DIRECTED BY THE ENGINEER.
14. TRAFFIC CONTROL DEVICES TO REMAIN IN PLACE OVERNIGHT SHALL BE LIGHTED.
15. CONTRACTOR SHALL NOTIFY CITY OF OXNARD CONSTRUCTION SERVICES AT 805-797-0818 TWO (2) DAYS PRIOR TO START OF WORK.
16. CONTRACTOR SHALL COORDINATE WITH CITY OF OXNARD TRAFFIC ENGINEER FOR SIGNAL OPERATIONS DURING CONSTRUCTION.
17. CONTRACTOR SHALL REPLACE ANY TRAFFIC SIGNAL LOOPS DAMAGED WITHIN SEVENTY-TWO (72) HOURS, PER THE LATEST EDITION OF CALTRANS STANDARD PLANS. LAYOUT OF LOOPS SHALL BE VERIFIED BY THE CITY OF OXNARD TRAFFIC ENGINEER PRIOR TO INSTALLATION.
18. TRAFFIC CONTROL DEVICES SHALL NOT BE PLACED ON PRIVATE PROPERTY.
19. ALL CONFLICTING STRIPING SHALL BE REMOVED USING WET SANDBLAST.

ACCESS AND SAFETY NOTES

1. CONTRACTOR SHALL COMPLY WITH ALL OCCUPATIONAL SAFETY AND HEALTH ADMINISTRATION (OSHA) REQUIREMENTS AS APPLICABLE.
2. CONTRACTOR SHALL MAINTAIN VEHICLE ACCESS TO ALL DRIVEWAYS AT ALL TIMES. IF DRIVEWAY CLOSURES ARE REQUIRED, CONTRACTOR SHALL PROVIDE NOTICES OF DRIVEWAY CLOSURE TO PROPERTY OWNERS AT LEAST FIVE (5) WORKING DAYS IN ADVANCE.
3. CONTRACTOR SHALL PROVIDE NOTICES OF STREET CLOSURE TO THE POLICE DEPARTMENT, FIRE DEPARTMENT, AND AFFECTED RESIDENTS AND BUSINESS AT LEAST FIVE (5) WORKING DAYS IN ADVANCE, AND SHALL PROVIDE DOCUMENTATION OF SUCH NOTIFICATION TO THE INSPECTOR PRIOR TO CLOSURE.
4. CONTRACTOR SHALL NOTIFY GOLD COAST TRANSIT AT LEAST FIVE (5) WORKING DAYS IN ADVANCE OF ANY TRAFFIC CONTROLS THAT BLOCK BUS ACCESS TO EXISTING BUS STOPS OR THAT REQUIRE BUS ROUTE DETOURS.
5. PAVEMENT REMOVAL, RECONSTRUCTION, AND PAVEMENT OVERLAY SHALL BE SINGLE LANE CLOSURE ON PORT HUENEME ROAD/HUENEME ROAD AS DIRECTED BY THE ENGINEER AND/OR CITY OF OXNARD TRAFFIC ENGINEER.
6. A MINIMUM OF FIVE (5) FEET OF LATERAL CLEARANCE SHALL BE MAINTAINED BETWEEN THE EDGE OF TRAVELED WAY AND ANY OPEN EXCAVATION. TEMPORARY CONCRETE RAILING (TYPE K PER CALTRANS STANDARD PLAN T3A AND T3B) ("K-RAIL") SHALL BE UTILIZED WHEN SHOWN ON THE PLANS.
7. TRENCH PLATING AND SHORING SHALL BE PREPARED AND SIGNED/SEALED BY A CALIFORNIA REGISTERED CIVIL ENGINEER.
8. CONTRACTOR IS RESPONSIBLE FOR ALL SHEETING/SHORING TO PROTECT EXCAVATIONS FROM SLOUGHING, EROSION, AND IMPACT OF ALL LIVE AND DEAD LOADS.
9. CONTRACTOR SHALL COMPLY WITH THE REQUIREMENTS OF THE AMERICAN DISABILITIES ACT (ADA) AND CALIFORNIA ACCESSIBILITY GUIDELINES AND MAINTAIN ALL PEDESTRIAN AND DETOUR FACILITIES IN AND ADJACENT TO WORK ZONES TO PROVIDE SAFETY AND FUNCTIONALITY.
10. SIDEWALK CLOSURES SHALL COMPLY WITH THE CA-MUTCD.
11. CONTRACTOR SHALL REGULARLY INSPECT DETOUR PATHWAYS AND TRAFFIC CONTROL DEVICES FOR ADEQUACY OF PEDESTRIAN TRAFFIC HAZARDS.
12. TEMPORARY PATHWAY SURFACES SHALL BE TREATED WITH NON-SLIP MATERIALS/FINISHES AND KEPT FREE OF ANY OBSTRUCTIONS AND HAZARDS SUCH AS HOLES, DEBRIS, MUD, CONSTRUCTION EQUIPMENT, STORED MATERIALS, ETC.
13. "NO PARKING" SIGNS SHALL BE PLACED SEVENTY-TWO (72) HOURS IN ADVANCE OF ALL AREAS WHERE TRAFFIC CONTROLS ARE TO BE INSTALLED AND FIFTY (50) FEET BEYOND THOSE TRAFFIC CONTROLS.
14. CONTRACTOR SHALL MAINTAIN ACCESS TO ALL DRIVEWAYS, RESIDENCES, AND BUSINESSES AT ALL TIMES UNLESS OTHERWISE NOTED. CONTRACTOR SHALL NOTIFY ALL AFFECTED RESIDENCES AND BUSINESSES AT LEAST 72 HOURS IN ADVANCE PRIOR TO CLOSURE OF A DRIVEWAY OR ACCESS.
15. END TREATMENTS SHALL BE DESIGNED FOR EACH APPLICATION TO STOP OR REDIRECT ERRANT VEHICLES UNDER PRESCRIBED CONDITIONS. END TREATMENTS SHALL BE PERIODICALLY INSPECTED TO VERIFY THAT THEY HAVE NOT BEEN HIT OR DAMAGED. DAMAGED END TREATMENT SHALL BE PROMPTLY REPAIRED OR REPLACED TO MAINTAIN THEIR CRASHWORTHINESS.
16. CONTRACTOR SHALL MAINTAIN PEDESTRIAN CROSSWALK AND SIGNAL OPERATION WITH ACCESSIBILITY THROUGHOUT THE DURATION OF CONSTRUCTION.

SUGGESTED STAGE CONSTRUCTION SEQUENCE

STAGE 1

- REMOVE EXISTING RAISED MEDIANS AND CONSTRUCT TEMPORARY AC
- REMOVE EXISTING STREET LIGHT
- CONSTRUCT RCB AND TRANSITION FROM AT STATION 33+77 (SOUTH CONFORM) TO STATION 34+60 (83 LF)
- CONSTRUCT TEMPORARY PEDESTRIAN FACILITIES ON EASTBOUND HUENEME ROAD

STAGE 2

- CONSTRUCT RCB FROM STATION 34+60 TO STATION 34+94 (34 LF)

STAGE 3

- CONSTRUCT RCB FROM STATION 34+94 TO STATION 35+50 (56 LF)

STAGE 4

- CONSTRUCT RCB AND TRANSITION FROM STATION 35+76 TO STATION 42+38 (NORTH CONFORM)
- CONSTRUCT RAISED MEDIAN, CURBS, SIDEWALKS, CURB RAMPS, PAVEMENT, GRIND AND OVERLAY, TRAFFIC SIGNAL IMPROVEMENTS, AND RESET STREET LIGHT
- CONTRACTOR SHALL SUBMIT A TRAFFIC CONTROL PLAN FOR INTERSECTION ROADWAY WORK
- CONTRACTOR SHALL KEEP AT LEAST 12' OF VEHICULAR TRAVELED WAY WIDTH OPEN ON J STREET IN BOTH DIRECTIONS AT ALL TIMES

CONSTRUCTION WORKING HOURS

1. WORKING HOURS AUTHORIZED BY THE CITY OF OXNARD SHALL NOT BE VIOLATED. VIOLATIONS MAY RESULT IN A STOP-WORK ISSUED BY THE CITY INSPECTOR

REGISTERED PROFESSIONAL ENGINEER
Michael Ip
No. 43671
Exp. 9/31/21
CIVIL
STATE OF CALIFORNIA

PLOT DATE: 8/5/20
PLOT DATE: 8/26/20
SAVE DATE: 8/24/20 DOKTOROV, NATALIYA K:\PROJECTS\ZONE2\TSUMAS(CHUMASH)CREEK\82323_TSUMAS_CREEK_HUENEME_RD_JANE_DR\DESIGN\DESIGNDRAWINGS\FINAL_PLANS\TRAFFIC CONTROL GENERAL NOTES.DWG
SAVE DATE: 6/22/20 SPOTTS C:\BOX\PROJECTS\COVEN VENTURA\COVEN.180235.01 TSUMAS CREEK AT HUENEME ROAD\2 ENGINEERING_CAD\2 SHEETS\GENERALNOTES-SC-TTC.DWG

D			
C			
B			
A			
△	REVISION DESCRIPTION	APP.	DATE

MNS ENGINEERS INC
ENGINEERING · SURVEYING
CONSTRUCTION MANAGEMENT
4580 E. Thousand Oaks Blvd.
Suite 101
Westlake Village, CA 91362
Phone: 805-648-4840
www.mnsengineers.com

MICHAEL IP — DESIGNED
SAM POTTS — DRAWN
ROBERT WILCOX — CHECKED

Kirk Rosman — WATERSHED PROJECT MANAGER — DATE 8/26/2020
WATERSHED DEPUTY DIRECTOR — DATE
WATERSHED DIRECTOR — DATE

VENTURA COUNTY
PUBLIC WORKS AGENCY
WATERSHED PROTECTION

SPEC. NO. WP21-01
PROJ. NO. 82323

TŠUMAŠ (CHUMASH) CREEK IMPROVEMENTS
HUENEME ROAD TO UPSTREAM OF JANE DRIVE
STAGE CONSTRUCTION TRAFFIC CONTROL PLAN – GENERAL NOTES

SHEET 18 OF 30
DRAWING SET NO. WP-2-386

LEGEND

- (8) 6' TEMPORARY CHAINLINK FENCE
- (9) 10' SOUND BARRIER/ SECURITY FENCE
- (10) VEHICULAR TRAFFIC DIRECTION
- (10) TRAFFIC CONTROL SIGN
- (10) CHANNELIZER (10' SPACING)
- (10) TYPE III BARRICADE
- (10) TEMPORARY RAILING TYPE K
- WORK ZONE
- (10) PCMS — PORTABLE CHANGEABLE MESSAGE SIGN
- (10) FLASHING ARROW BOARD
- (10) ## — TEMPORARY STRIPING DETAIL NUMBER PER SSP A20
- (10) XW — TEMPORARY BASIC 12" CROSSWALK MARKING PER SSP A24F
- (10) REMOVE MEDIAN AND CONSTRUCT TEMPORARY PAVEMENT
- (10) TEMPORARY LANE SEPARATOR – BOLTED-DOWN RUBBER CURB SYSTEM WITH DELINEATORS

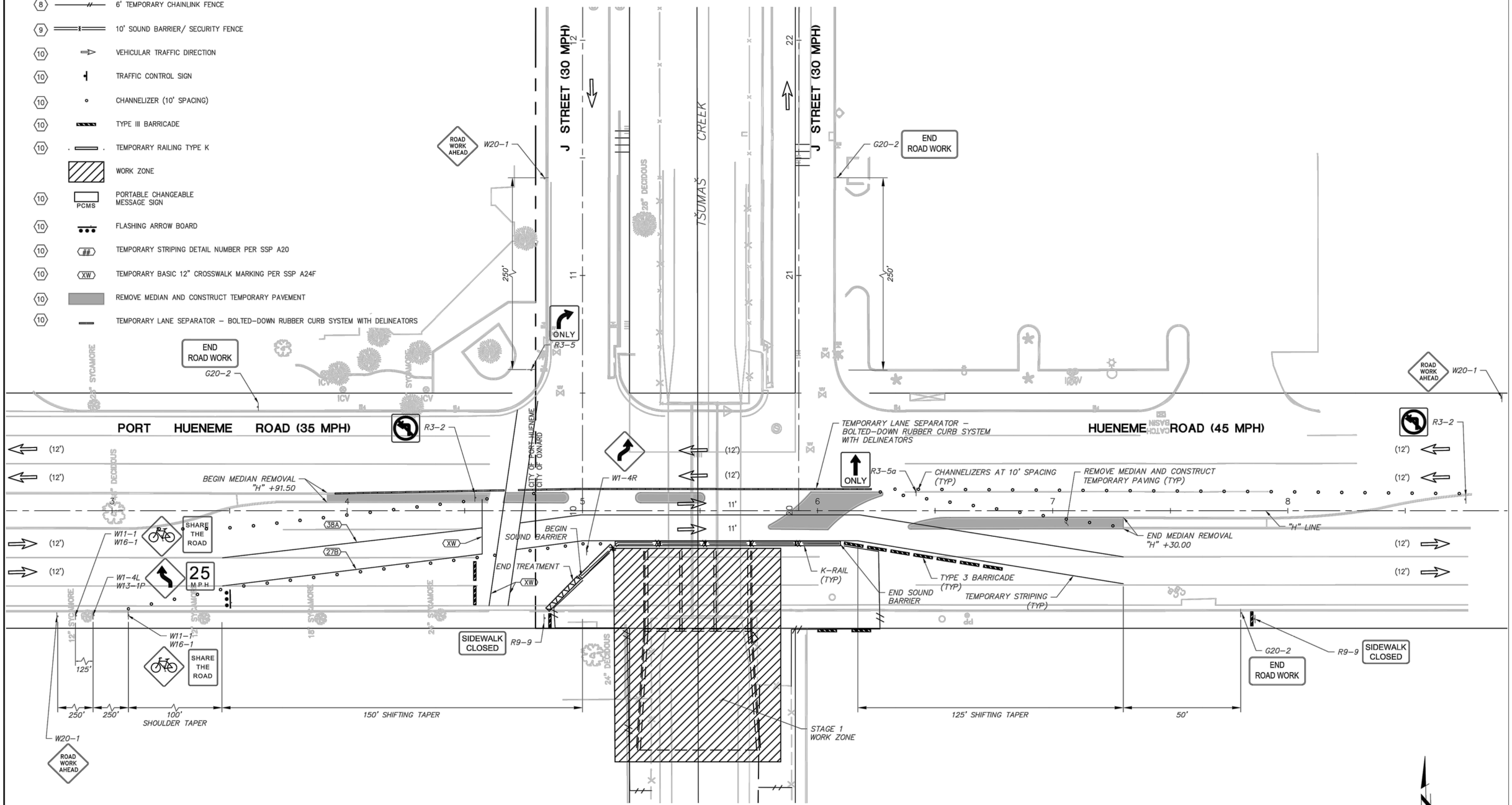

REGISTERED PROFESSIONAL ENGINEER Michael Ip No.43671 Exp. 9/31/21 CIVIL STATE OF CALIFORNIA

PLOT DATE: 8/11/20

SAVE DATE: 8/11/20 MUELLER, JOHN K:\PROJECTS\ZONE2\TSUMAS(CHUMASH)CREEK\82323_TSUMAS_CREEK_HUENEME_RD_JANE_DR\DESIGN\DESIGNDRAWINGS\FINAL_PLANS\STAGE CONSTRUCTION AND TRAFFIC HANDLING – STAGE 3.DWG
SAVE DATE: 8/11/20 125936 K:\PROJECTS\ZONE2\TSUMAS(CHUMASH)CREEK\82323_TSUMAS_CREEK_HUENEME_RD_JANE_DR\DESIGN\DESIGNDRAWINGS\FINAL_PLANS\CONSULTANT DRAWINGS\MNS\MNS DRAWINGS_2020-06-24\STAGE 1.DWG

	REVISION	DESCRIPTION	APP.	DATE
D				
C				
B				
A				
△				

MNS ENGINEERS INC — ENGINEERING | SURVEYING — CONSTRUCTION MANAGEMENT
4580 E. Thousand Oaks Blvd. Suite 101 Westlake Village, CA 91362 Phone: 805-648-4840 www.mnsengineers.com

MICHAEL IP — DESIGNED
SAM POTTS — DRAWN
ROBERT WILCOX — CHECKED
PROJECT MANAGER — DATE 8/26//2020
DEPUTY DIRECTOR — DATE
DISTRICT DIRECTOR — DATE

VENTURA COUNTY PUBLIC WORKS AGENCY WATERSHED PROTECTION

SPEC. NO. WP21-01
PROJ. NO. 82323

TŠUMAŠ (CHUMASH) CREEK IMPROVEMENTS
HUENEME ROAD TO UPSTREAM OF JANE DRIVE
STAGE CONSTRUCTION TRAFFIC CONTROL PLAN – STAGE 1

SHEET 19 OF 30
DRAWING SET NO. WP-2-386

LEGEND

- (8) 6' TEMPORARY CHAINLINK FENCE
- (9) 10' SOUND BARRIER/ SECURITY FENCE
- (10) VEHICULAR TRAFFIC DIRECTION
- (10) TRAFFIC CONTROL SIGN
- (10) CHANNELIZER (10' SPACING)
- (10) TYPE III BARRICADE
- (10) TEMPORARY RAILING TYPE K
- WORK ZONE
- (10) PCMS — PORTABLE CHANGEABLE MESSAGE SIGN
- (10) FLASHING ARROW BOARD
- (10) (##) TEMPORARY STRIPING DETAIL NUMBER PER SSP A20
- (10) (XW) TEMPORARY BASIC 12" CROSSWALK MARKING PER SSP A24F
- (10) REMOVE MEDIAN AND CONSTRUCT TEMPORARY PAVEMENT
- (10) TEMPORARY LANE SEPARATOR – BOLTED-DOWN RUBBER CURB SYSTEM WITH DELINEATORS

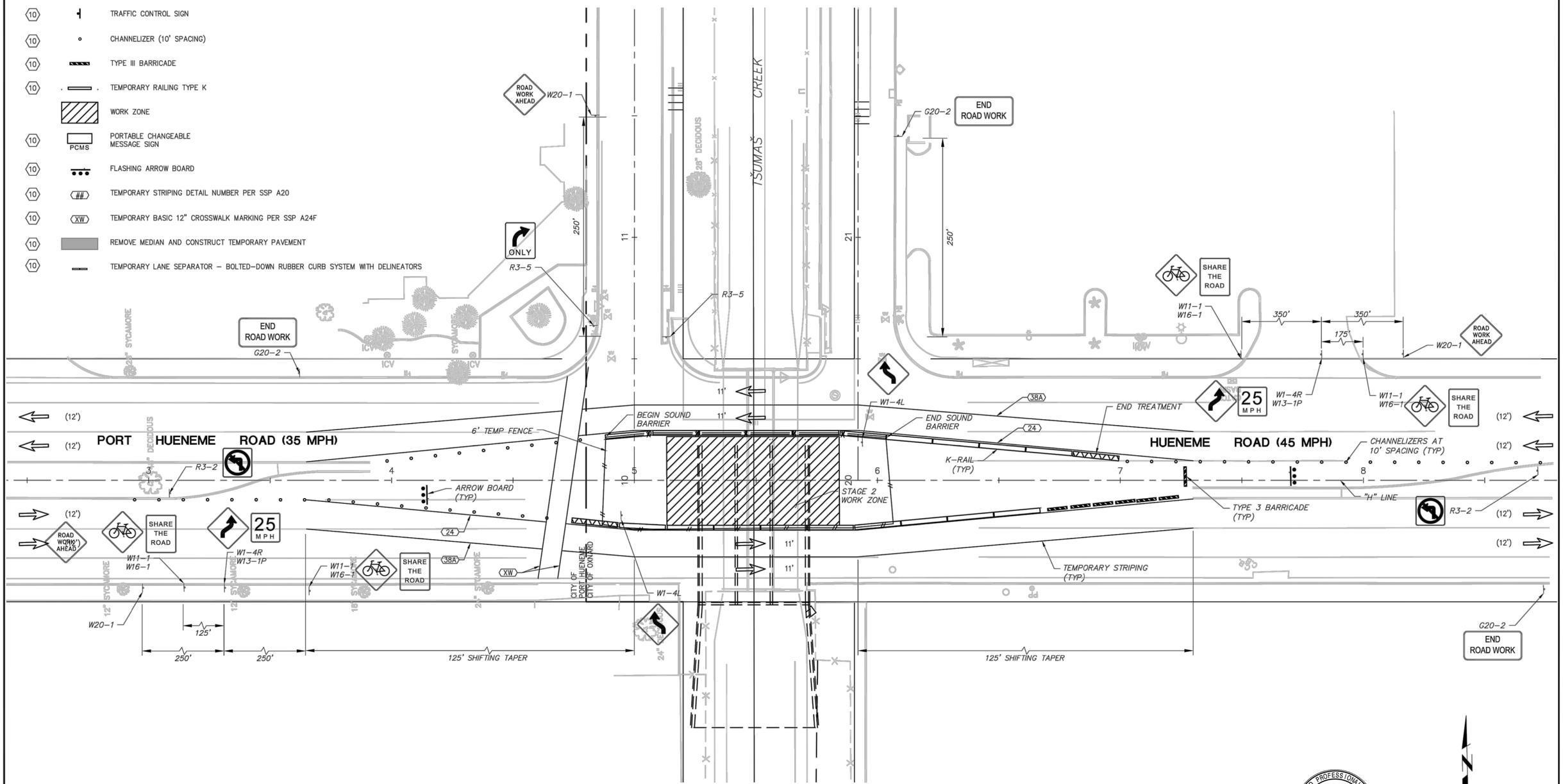

REGISTERED PROFESSIONAL ENGINEER
Michael Ip
No.43671
Exp. 3/31/21
CIVIL
STATE OF CALIFORNIA

PLOT DATE: 8/11/20

SAVE DATE: 8/11/20 MUELLER, JOHN K:\PROJECTS\ZONE2\TSUMAS(CHUMASH)CREEK\82323_TSUMAS_CREEK_HUENEME_RD_JANE_DR\DESIGN\DESIGNDRAWINGS\FINAL_PLANS\STAGE CONSULTANT DRAWINGS\MNS\MNS DRAWINGS 2020-06-24\STAGE 2.DWG

D			
C			
B			
A			
△	REVISION DESCRIPTION	APP.	DATE

MNS ENGINEERS INC
ENGINEERING | SURVEYING
CONSTRUCTION MANAGEMENT

4580 E. Thousand Oaks Blvd.
Suite 101
Westlake Village, CA 91362
Phone: 805-648-4840
www.mnsengineers.com

MICHAEL IP — DESIGNED
SAM POTTS — DRAWN
ROBERT WILCOX — CHECKED
PROJECT MANAGER — DATE 8/26/2020
DEPUTY DIRECTOR — DATE
DISTRICT DIRECTOR — DATE

VENTURA COUNTY
PUBLIC WORKS AGENCY
WATERSHED PROTECTION

SPEC. NO. WP21-01
PROJ. NO. 82323

TŠUMAŠ (CHUMASH) CREEK IMPROVEMENTS
HUENEME ROAD TO UPSTREAM OF JANE DRIVE
STAGE CONSTRUCTION TRAFFIC CONTROL PLAN – STAGE 2

SHEET 20 OF 30
DRAWING SET NO. WP-2-386

LEGEND

- (8) 6' TEMPORARY CHAINLINK FENCE
- (9) 10' SOUND BARRIER/ SECURITY FENCE
- (10) VEHICULAR TRAFFIC DIRECTION
- (10) TRAFFIC CONTROL SIGN
- (10) CHANNELIZER (10' SPACING)
- (10) TYPE III BARRICADE
- (10) TEMPORARY RAILING TYPE K
- WORK ZONE
- (10) PCMS — PORTABLE CHANGEABLE MESSAGE SIGN
- (10) FLASHING ARROW BOARD
- (10) ## — TEMPORARY STRIPING DETAIL NUMBER PER SSP A20
- (10) XW — TEMPORARY BASIC 12" CROSSWALK MARKING PER SSP A24F
- (10) REMOVE MEDIAN AND CONSTRUCT TEMPORARY PAVEMENT
- (10) TEMPORARY LANE SEPARATOR – BOLTED–DOWN RUBBER CURB SYSTEM WITH DELINEATORS
- AREA SHALL NOT HAVE OBSTRUCTIONS GREATER THAN 36" ABOVE THE ROADWAY SURFACE FOR INTERSECTION SIGHT DISTANCE PURPOSES. CHAINLINK FENCE OR MATERIAL WITH LESS THAN 30% SCREEN IS OK.

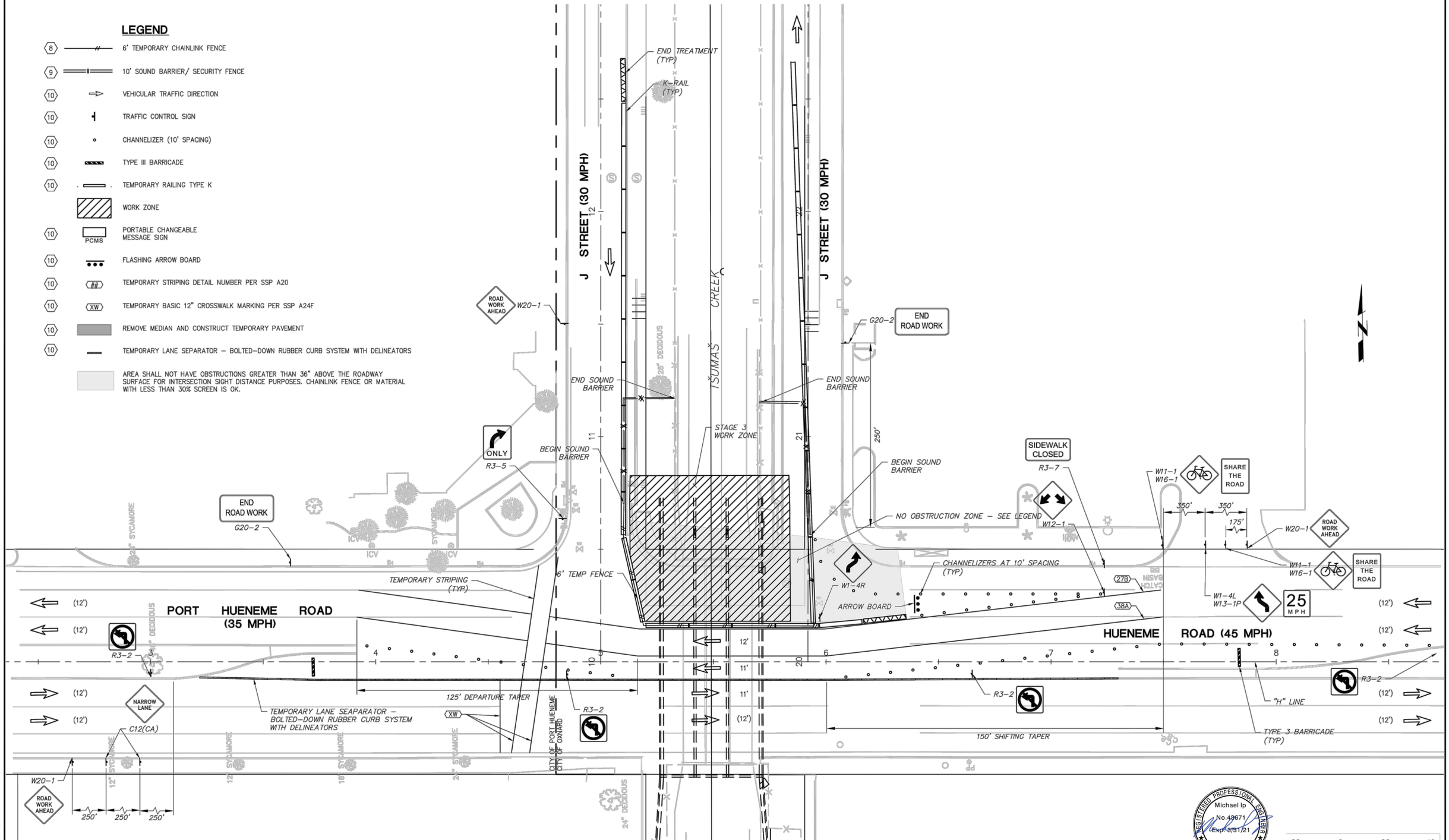

REGISTERED PROFESSIONAL ENGINEER
Michael Ip
No. 43671
Exp. 3/31/21
CIVIL
STATE OF CALIFORNIA

PLOT DATE: 8/11/20

SAVE DATE: 8/11/20 MUELLER, JOHN K:\PROJECTS\ZONE2\TSUMAS(CHUMASH)CREEK\82323_TSUMAS_CREEK_HUENEME_RD_JANE_DR\DESIGN\DESIGNDRAWINGS\FINAL_PLANS\STAGE CONSTRUCTION AND TRAFFIC HANDLING – STAGE 3.DWG
SAVE DATE: 8/11/20 125936 K:\PROJECTS\ZONE2\TSUMAS(CHUMASH)CREEK\82323_TSUMAS_CREEK_HUENEME_RD_JANE_DR\DESIGN\DESIGNDRAWINGS\FINAL_PLANS\CONSULTANT DRAWINGS\MNS\MNS DRAWINGS_2020-06-24\STAGE 3.DWG

	REVISION	DESCRIPTION	APP.	DATE
D				
C				
B				
A				

MNS ENGINEERS INC
ENGINEERING | SURVEYING
CONSTRUCTION MANAGEMENT
4580 E. Thousand Oaks Blvd.
Suite 101
Westlake Village, CA 91362
Phone: 805-648-4840
www.mnsengineers.com

MICHAEL IP — DESIGNED
SAM POTTS — DRAWN
ROBERT WILCOX — CHECKED
PROJECT MANAGER — DATE 8/26//2020
DEPUTY DIRECTOR — DATE
DISTRICT DIRECTOR — DATE

VENTURA COUNTY
PUBLIC WORKS AGENCY
WATERSHED PROTECTION

SPEC. NO. WP21-01
PROJ. NO. 82323

TŠUMAŠ (CHUMASH) CREEK IMPROVEMENTS
HUENEME ROAD TO UPSTREAM OF JANE DRIVE
STAGE CONSTRUCTION TRAFFIC CONTROL PLAN – STAGE 3

SHEET 21 OF 30
DRAWING SET NO. WP-2-386

LEGEND

8		6' TEMPORARY CHAINLINK FENCE
9		10' SOUND BARRIER/ SECURITY FENCE
10		VEHICULAR TRAFFIC DIRECTION
10		TRAFFIC CONTROL SIGN
10		CHANNELIZER (10' SPACING)
10		TYPE III BARRICADE
10		TEMPORARY RAILING TYPE K
		WORK ZONE
10	PCMS	PORTABLE CHANGEABLE MESSAGE SIGN
10		FLASHING ARROW BOARD
10	##	TEMPORARY STRIPING DETAIL NUMBER PER SSP A20
10	XW	TEMPORARY BASIC 12" CROSSWALK MARKING PER SSP A24F
10		REMOVE MEDIAN AND CONSTRUCT TEMPORARY PAVEMENT
10		TEMPORARY LANE SEPARATOR – BOLTED-DOWN RUBBER CURB SYSTEM WITH DELINEATORS

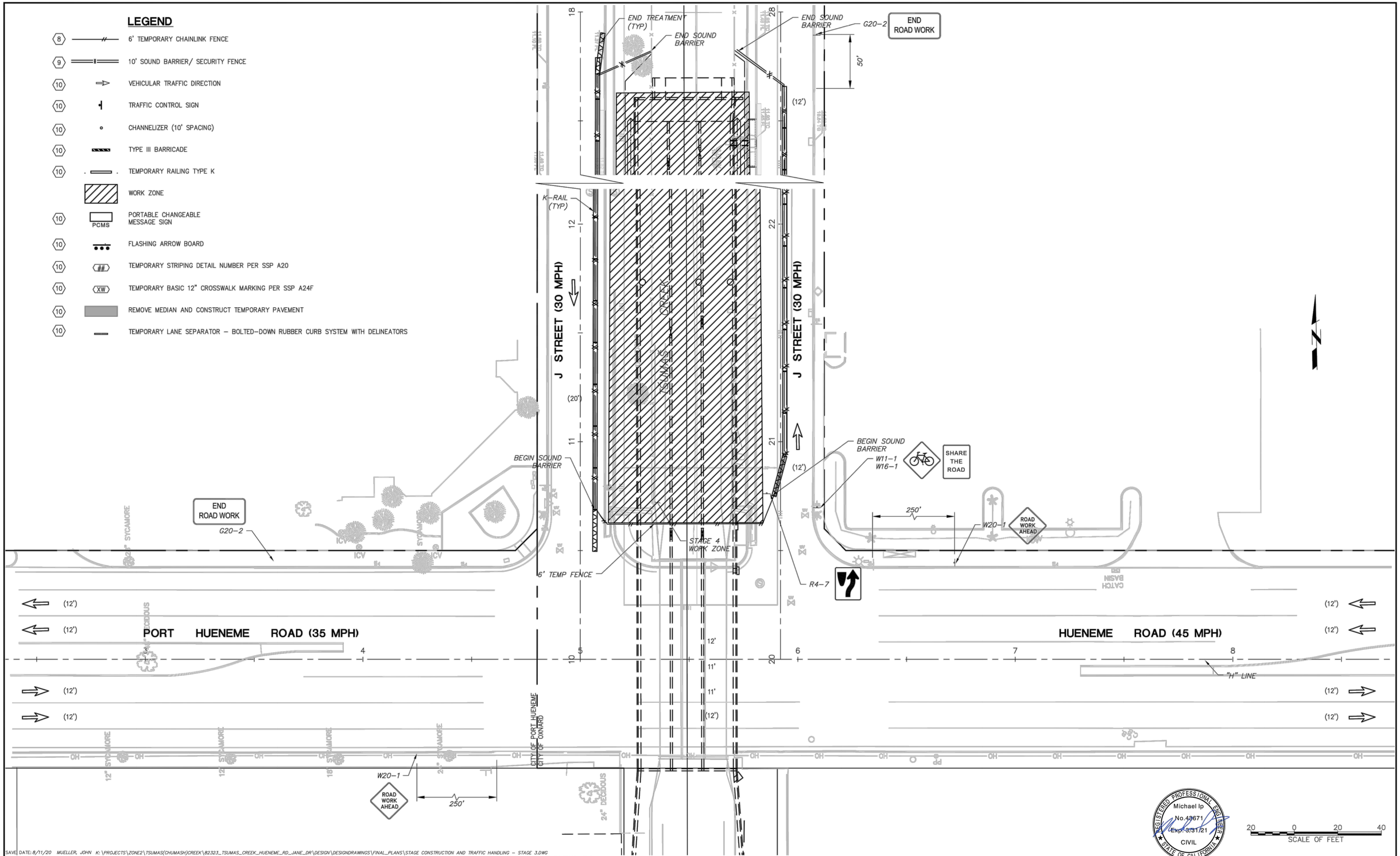

SAVE DATE: 8/11/20 MUELLER, JOHN K:\PROJECTS\ZONE2\TSUMAS(CHUMASH)CREEK\82323_TSUMAS_CREEK_HUENEME_RD_JANE_DR\DESIGN\DESIGNDRAWINGS\FINAL_PLANS\STAGE CONSTRUCTION AND TRAFFIC HANDLING – STAGE 3.DWG
SAVE DATE: 8/11/20 125936 K:\PROJECTS\ZONE2\TSUMAS(CHUMASH)CREEK\82323_TSUMAS_CREEK_HUENEME_RD_JANE_DR\DESIGN\DESIGNDRAWINGS\FINAL_PLANS\CONSULTANT DRAWINGS\MNS\MNS DRAWINGS_2020-06-24\STAGE 4.DWG

PLOT DATE: 8/11/20

	REVISION	DESCRIPTION	APP.	DATE
D				
C				
B				
A				
△				

MNS ENGINEERS INC
ENGINEERING | SURVEYING
CONSTRUCTION MANAGEMENT
4580 E. Thousand Oaks Blvd.
Suite 101
Westlake Village, CA 91362
Phone: 805-648-4840
www.mnsengineers.com

MICHAEL IP — DESIGNED
SAM POTTS — DRAWN
ROBERT WILCOX — CHECKED
PROJECT MANAGER — DATE 8/26//2020
DEPUTY DIRECTOR — DATE
DISTRICT DIRECTOR — DATE

VENTURA COUNTY
PUBLIC WORKS AGENCY
WATERSHED PROTECTION

SPEC. NO. WP21-01
PROJ. NO. 82323

TŠUMAŠ (CHUMASH) CREEK IMPROVEMENTS
HUENEME ROAD TO UPSTREAM OF JANE DRIVE
STAGE CONSTRUCTION TRAFFIC CONTROL PLAN – STAGE 4

SHEET 22 OF 30
DRAWING SET NO. WP-2-386

LEGEND

- (XX) STRIPING DETAIL NUMBER IN CALTRANS STANDARD PLAN A20A THROUGH A20F
- (LL) PAVEMENT MARKING, 12" WIDE WHITE LIMIT LINE PER CALTRANS STANDARD PLAN A24F
- ROADSIDE SIGN PER COSP 203 AND COSP 204
- GREEN BIKE LANE MARKING PER DETAIL HEREON
- SHARED ROADWAY BICYCLE MARKING (SHARROW) PER CALTRANS STANDARD PLAN A24C
- TYPE I 10' ARROW PER CALTRANS STANDARD PLAN A24A. DIRECTION SHOWN ON PLAN
- TYPE IV ARROW PER CALTRANS STANDARD PLAN A24A. DIRECTION SHOWN ON PLAN
- CHANGE OF STRIPING DETAIL

SIGNAGE CONSTRUCTION NOTES

- PP PROTECT IN PLACE EXISTING SIGN AND POST
- RM REMOVE EXISTING SIGN AND POST
- S INSTALL SIGN AND POST
- RP REMOVE EXISTING SIGN AND POST AND INSTALL NEW SIGN AND POST

GENERAL NOTES

1. ALL ROADSIDE SIGNING, MARKINGS, AND MARKERS SHALL BE IN CONFORMANCE WITH THE LATEST EDITION OF THE CALTRANS STANDARD PLANS AND SPECIFICATIONS, AND THE LATEST EDITION OF THE CA MUTCD.
2. ALL NEW STRIPING SHALL BE THERMOPLASTIC.
3. THE CONTRACTOR SHALL REMOVE ALL CONFLICTING STRIPING USING WET SANDBLAST.

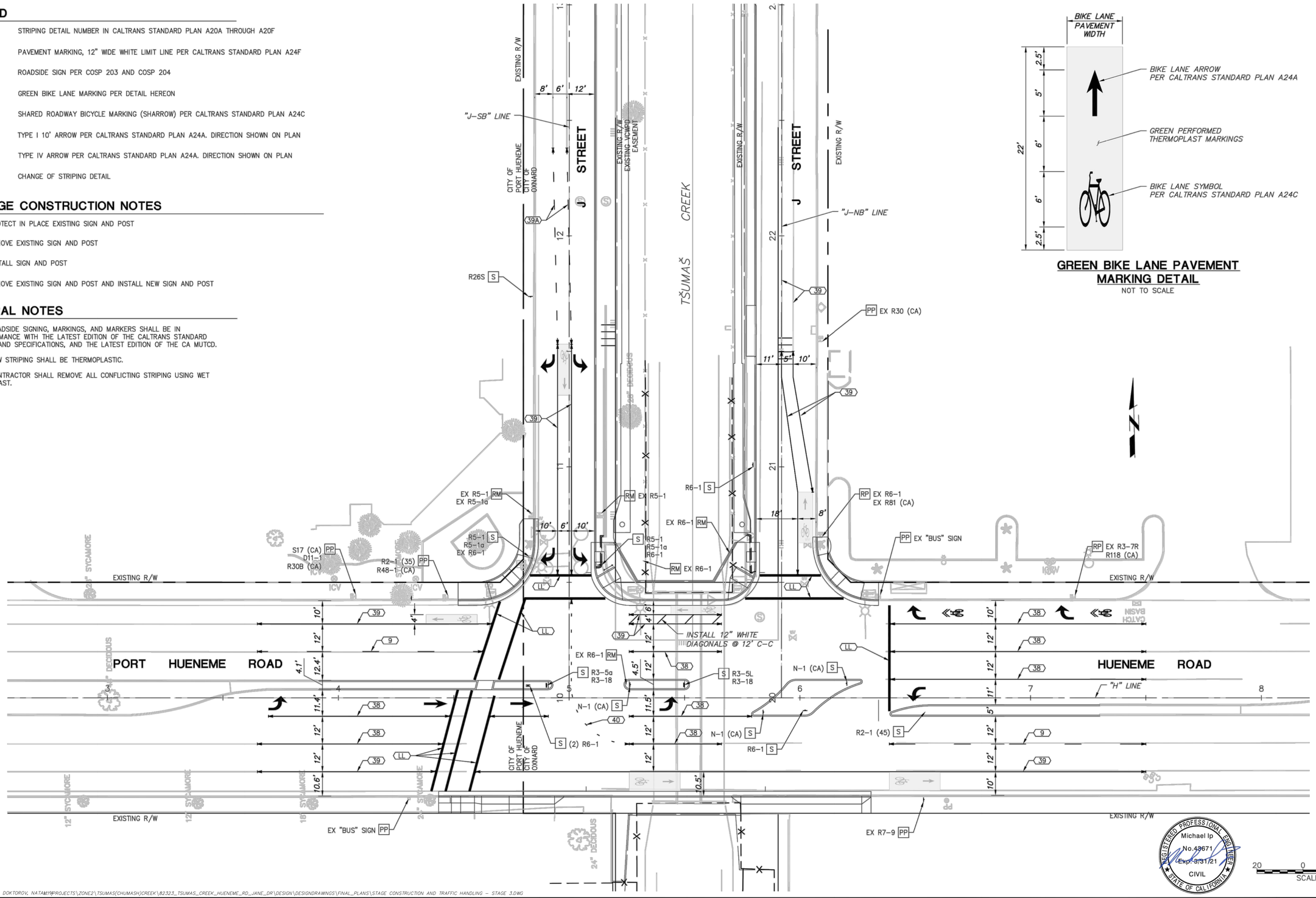

REGISTERED PROFESSIONAL ENGINEER
Michael Ip
No.43671
Exp. 3/31/21
CIVIL
STATE OF CALIFORNIA

PLOT DATE: 8/26/20

SAVE DATE: 8/24/20 DOKTOROV, NATAMY:WPROJECTS\ZONE2\TSUMAS(CHUMASH)CREEK\82323_TSUMAS_CREEK_HUENEME_RD_JANE_DR\DESIGN\DESIGNDRAWINGS\FINAL_PLANS\STAGE CONSTRUCTION AND TRAFFIC HANDLING - STAGE 3.DWG

D			
C			
B			
A			
△	REVISION DESCRIPTION	APP.	DATE

MNS ENGINEERS INC
ENGINEERING | SURVEYING
CONSTRUCTION MANAGEMENT

4580 E. Thousand Oaks Blvd.
Suite 101
Westlake Village, CA 91362
Phone: 805-648-4840
www.mnsengineers.com

MICHAEL IP — DESIGNED
SAM POTTS — DRAWN
ROBERT WILCOX — CHECKED

PROJECT MANAGER — DATE 8/26//2020
DEPUTY DIRECTOR — DATE
DIRECTOR — DATE

VENTURA COUNTY
PUBLIC WORKS AGENCY
WATERSHED PROTECTION

SPEC. NO. WP21-01
PROJ. NO. 82323

TŠUMAŠ (CHUMASH) CREEK IMPROVEMENTS
HUENEME ROAD TO UPSTREAM OF JANE DRIVE
SIGNING AND STRIPING PLAN

SHEET 23 OF 30
DRAWING SET NO. WP-2-386

NOTES:

1. ALL SECTION ARE ORIENTED LOOKING DOWNSTREAM.

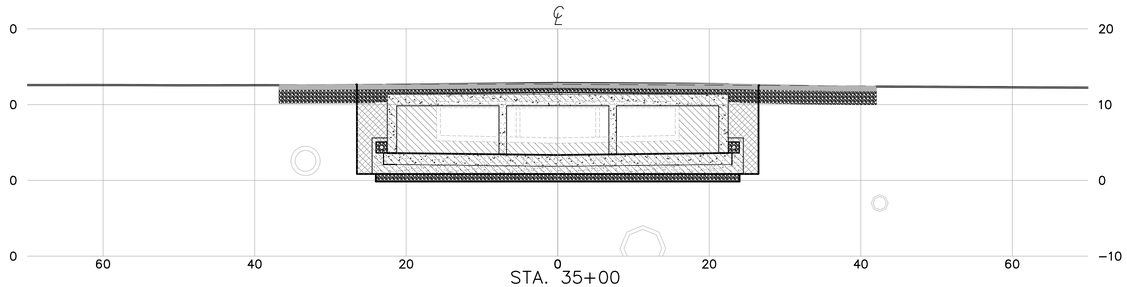

STA. 35+00

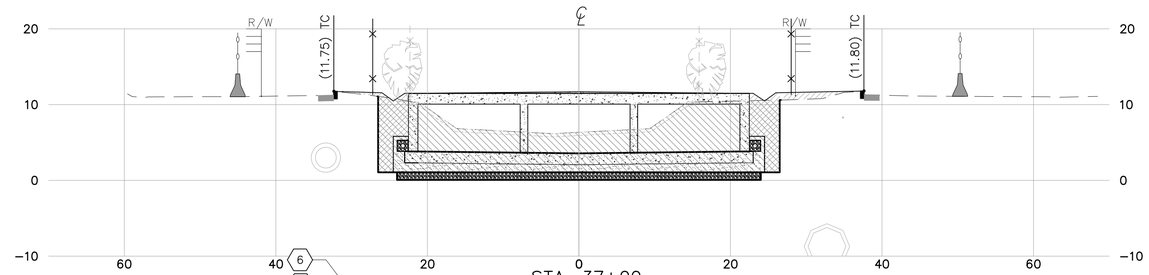

STA. 37+00

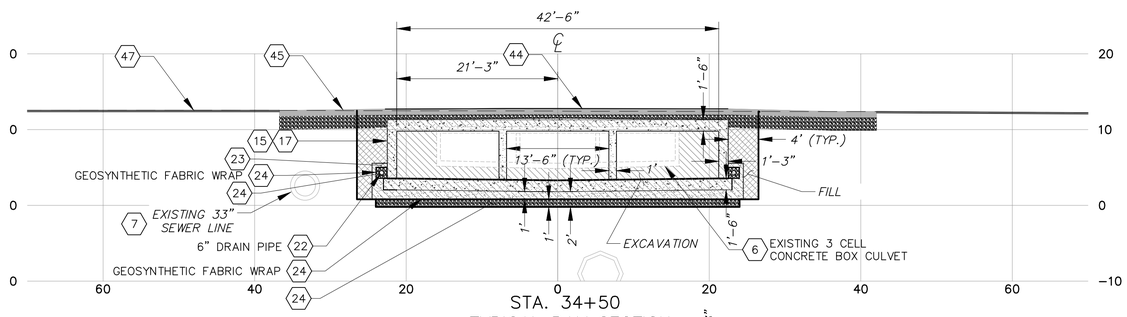

STA. 34+50
TYPICAL PAY SECTION

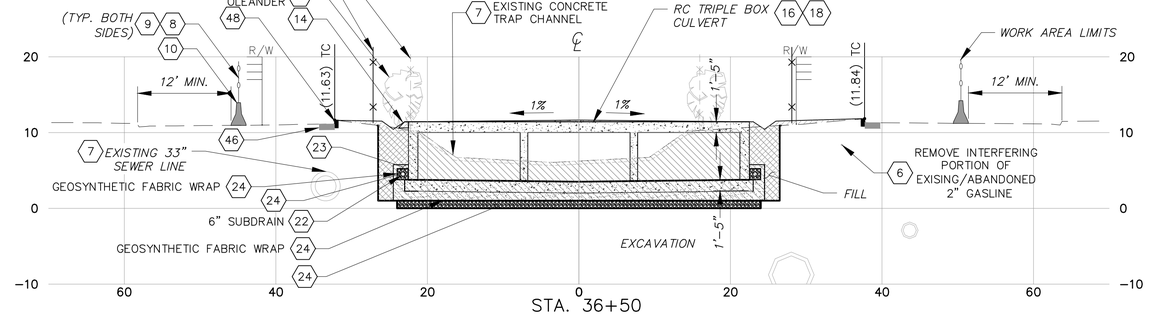

STA. 36+50
TYPICAL PAY SECTION

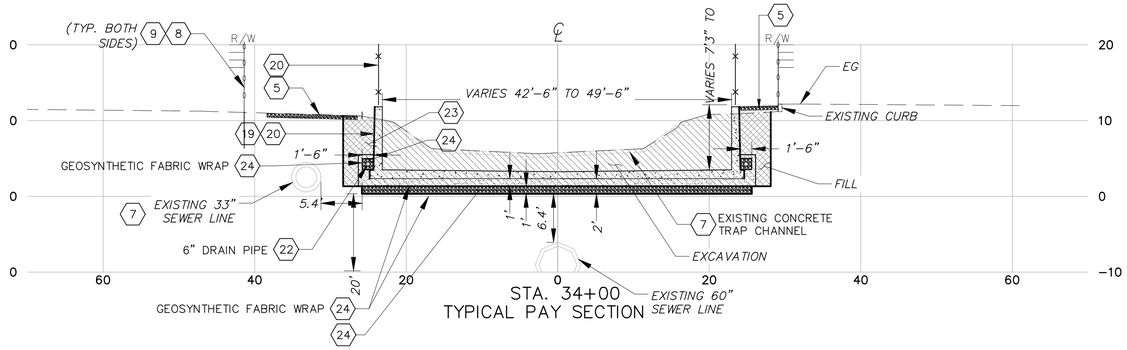

STA. 34+00
TYPICAL PAY SECTION

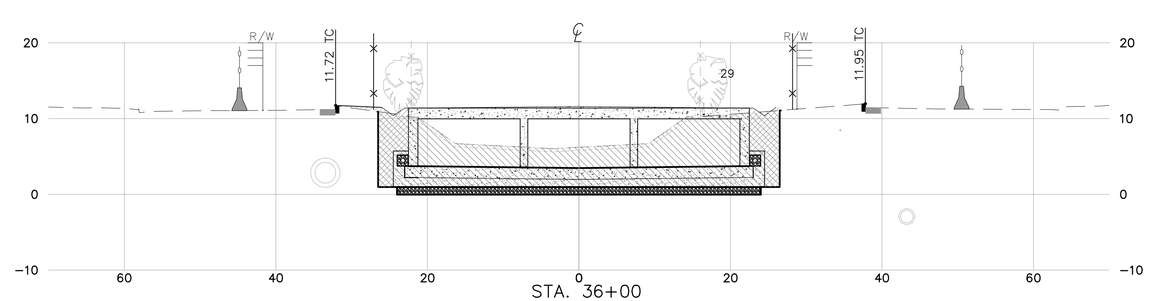

STA. 36+00

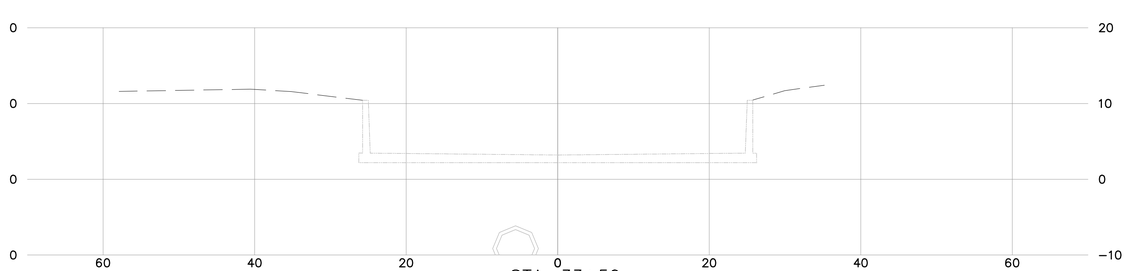

STA. 33+50

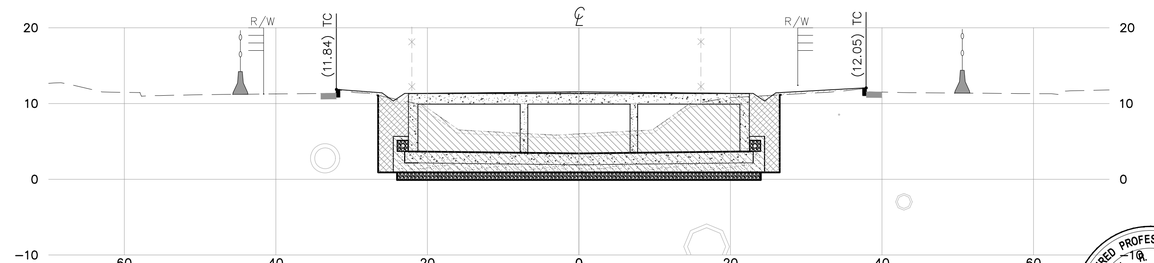

STA. 35+50

SECTION

SCALE OF FEET

REGISTERED PROFESSIONAL ENGINEER KIRK T. NORMAN No. 50367 Exp. 6/30/21 CIVIL STATE OF CALIFORNIA

PLOT DATE: 9/17/20

SAVE DATE: 9/2/20 MUELLER, JOHN K:\PROJECTS\ZONE2\TSUMAS(CHUMASH)CREEK\82323_TSUMAS_CREEK_HUENEME_RD_JANE_DR\DESIGN\DESIGNDRAWINGS\FINAL_PLANS\CROSS_SECTIONS_STA_37+50_TO_41+00.DWG

REVISION	DESCRIPTION	APP.	DATE
D			
C			
B			
A			
△			

J MUELLER	Kirk Norman	9/24/2020
DESIGNED	WATERSHED PROJECT MANAGER	DATE
JM / ND		9/28/2020
DRAWN	WATERSHED DEPUTY DIRECTOR	DATE
K NORMAN		9/29/2020
CHECKED	WATERSHED DIRECTOR	DATE

VENTURA COUNTY
PUBLIC WORKS AGENCY
WATERSHED PROTECTION

SPEC. NO. WP21-01
PROJ. NO. 82323

TŠUMAŠ (CHUMASH) CREEK IMPROVEMENTS
HUENEME ROAD TO UPSTREAM OF JANE DRIVE
CROSS SECTIONS STA 33+50 TO 37+00

SHEET 24 OF 30
DRAWING SET NO. WP-2-386

ADDENDUM NO. 1

NOTES:

1. ALL SECTION ARE ORIENTED LOOKING DOWNSTREAM.

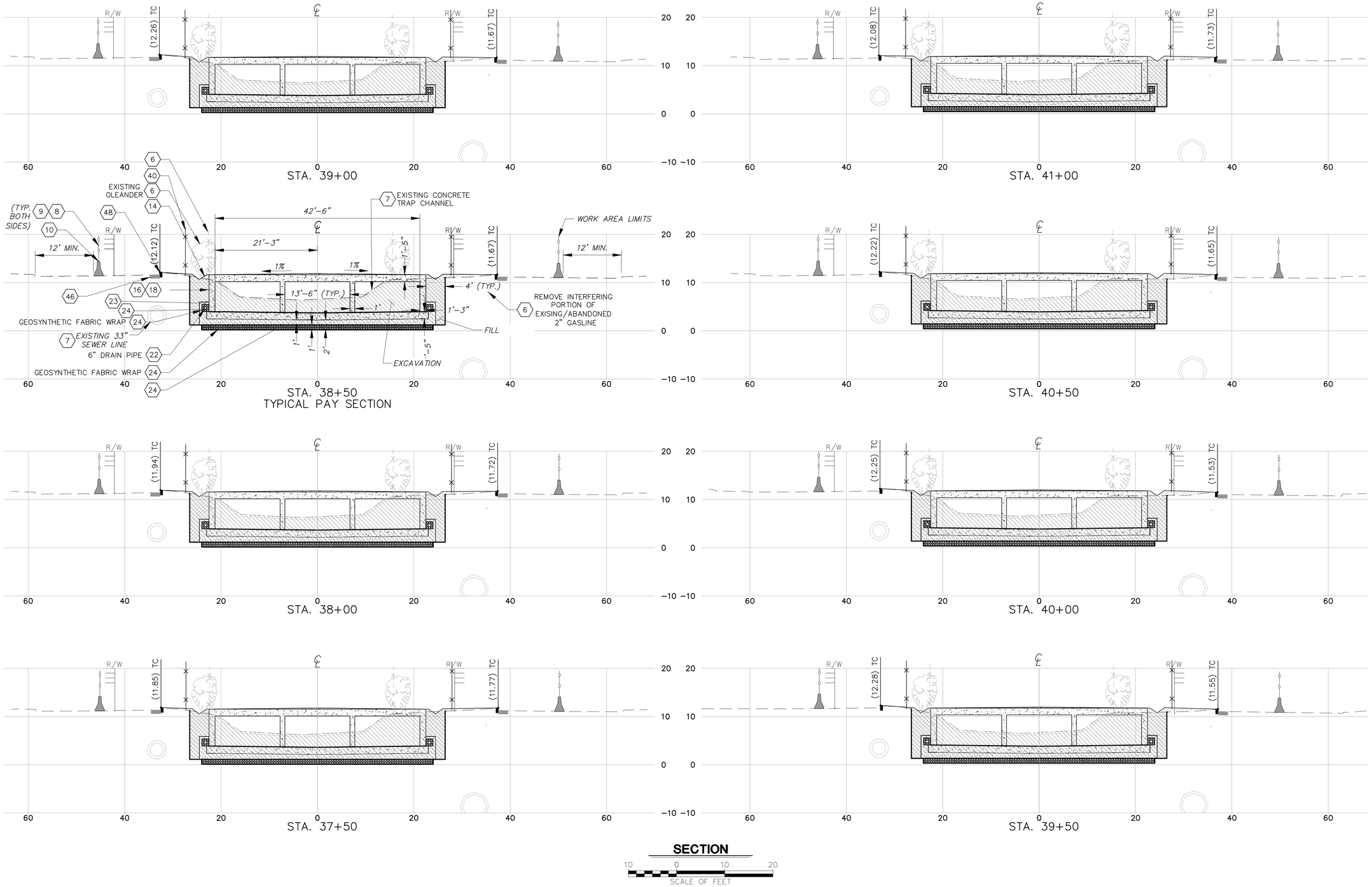

REGISTERED PROFESSIONAL ENGINEER
KIRK R. NORMAN
No. 50367
Exp. 6/30/21
CIVIL
STATE OF CALIFORNIA

PLOT DATE: 9/17/20

SAVE DATE: 9/2/20 MUELLER, JOHN K:\PROJECTS\ZONE2\TSUMAS(CHUMASH)CREEK\82323_TSUMAS_CREEK_HUENEME_RD_JANE_DR\DESIGN\DESIGNDRAWINGS\FINAL_PLANS\CROSS SECTIONS STA 37+50 TO 41+00.DWG

	REVISION	DESCRIPTION	APP.	DATE
D				
C				
B				
A				
△				

J MUELLER	Kirk R. Norman	9/24/2020
DESIGNED	WATERSHED PROJECT MANAGER	DATE
JM / ND		9/28/2020
DRAWN	WATERSHED DEPUTY DIRECTOR	DATE
K NORMAN		9/29/2020
CHECKED	WATERSHED DIRECTOR	DATE

VENTURA COUNTY
PUBLIC WORKS AGENCY
WATERSHED PROTECTION

SPEC. NO. WP21-01
PROJ. NO. 82323

TŠUMAŠ (CHUMASH) CREEK IMPROVEMENTS
HUENEME ROAD TO UPSTREAM OF JANE DRIVE
CROSS SECTIONS STA 37+50 TO 41+00

SHEET 25 OF 30
DRAWING SET NO. WP-2-386

ADDENDUM NO. 1

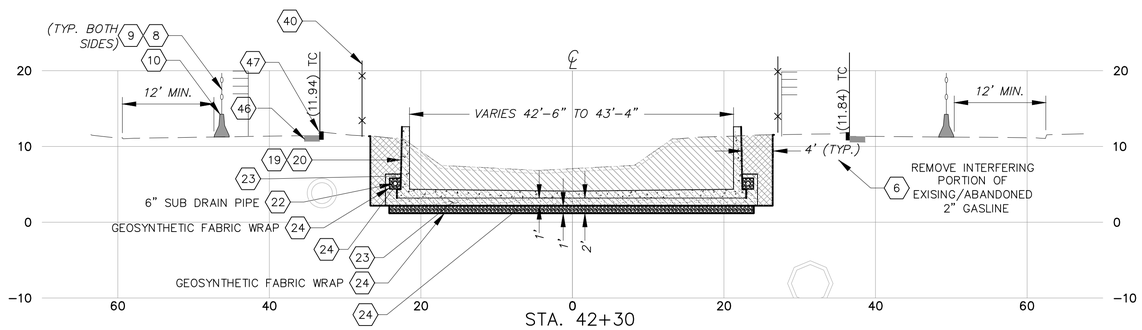

STA. 42+30
TYPICAL PAY SECTION

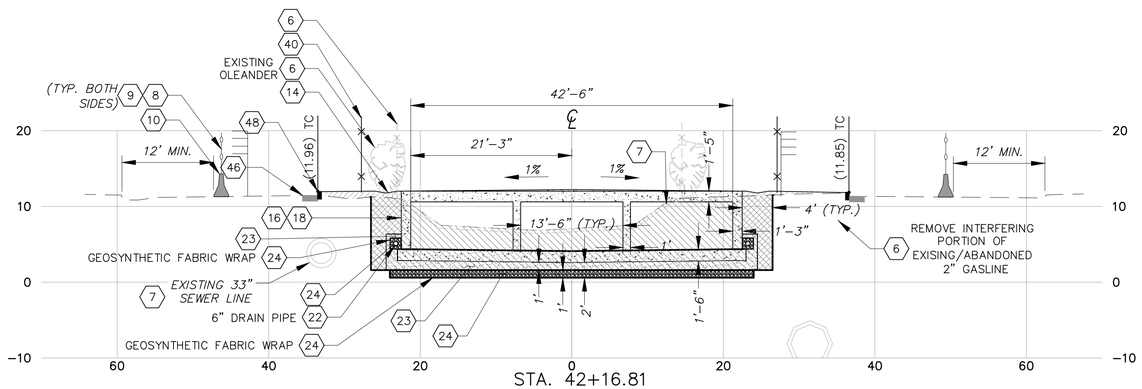

STA. 42+16.81
TYPICAL PAY SECTION

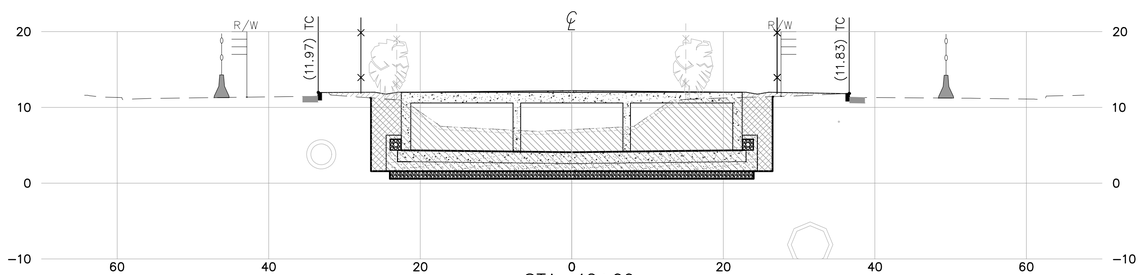

STA. 42+00

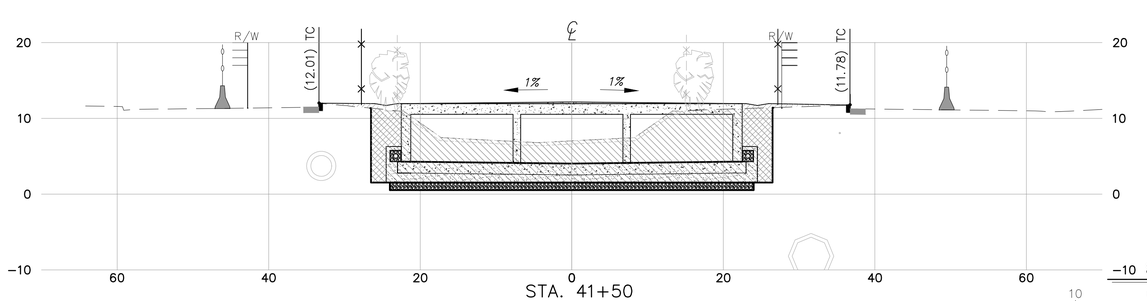

STA. 41+50

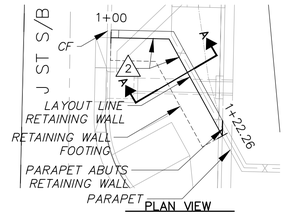

PLAN VIEW
SCALE 1" = 10'

SECTION A–A
NOT TO SCALE

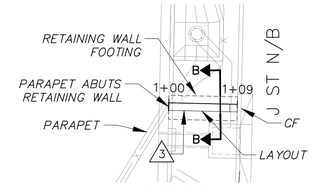

PLAN VIEW
SCALE 1" = 10'

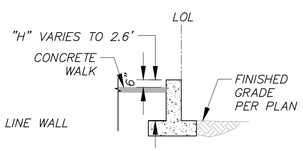

SECTION B–B
NOT TO SCALE

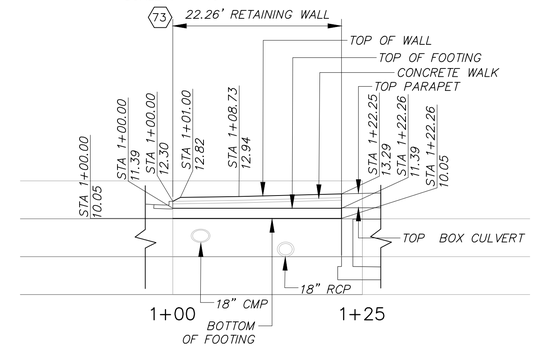

PROFILE VIEW
SCALE VERT/HORZ = 1" = 10'

RETAINING WALL "A"

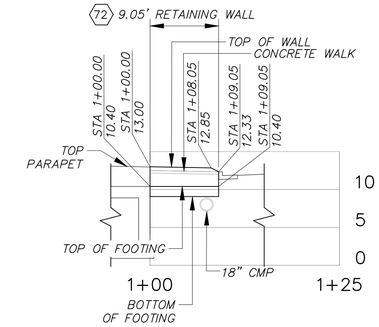

PROFILE VIEW
SCALE VERT/HORZ = 1" = 10'

RETAINING WALL "B"

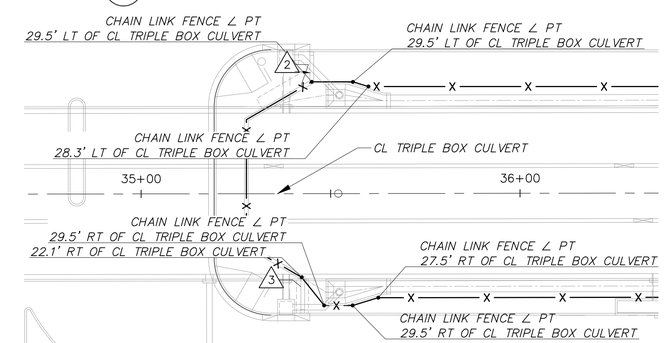

CHAINLINK FENCE ANGLE PT LOCATION DETAIL
NOT TO SCALE

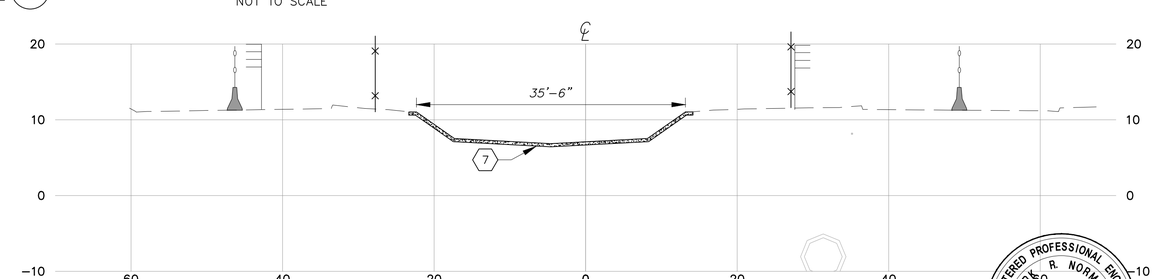

STA. 42+40
TYPICAL PAY SECTION

SECTION

SCALE OF FEET

NOTES:

1. ALL CROSS SECTIONS ARE ORIENTED LOOKING DOWNSTREAM.
2. CONSTRUCT MODIFIED RETAINING WALL PER SPPWC STANDARD 615–4 TYPE 6, LOAD CASE 1, "H" PER PROFILE AND PER DETAIL Z1/26
3. CONSTRUCT MODIFIED RETAING WALL PER SPPWC STANDARD 610–3 TYPE 1, LOAD CASE 1, "H" PER PER PROFILE AND PER DETAIL Z2/26

REGISTERED PROFESSIONAL ENGINEER KIRK R. NORMAN No. 50367 Exp. 6/30/21 CIVIL STATE OF CALIFORNIA

D			
C			
B			
A			
△	REVISION DESCRIPTION	APP.	DATE

J MUELLER — DESIGNED
JM / ND — DRAWN
K NORMAN — CHECKED

WATERSHED PROJECT MANAGER — 9/24/2020 DATE
WATERSHED DEPUTY DIRECTOR — 9/28/2020 DATE
WATERSHED DIRECTOR — 9/29/2020 DATE

VENTURA COUNTY PUBLIC WORKS AGENCY WATERSHED PROTECTION

SPEC. NO. WP21–01
PROJ. NO. 82323

TŠUMAŠ (CHUMASH) CREEK IMPROVEMENTS HUENEME ROAD TO UPSTREAM OF JANE DRIVE

CROSS SECTIONS STA 41+50 TO 42+40, WALL LOCATION DETAILS, AND RETAINING WALL DETAILS

SHEET 26 OF 30
DRAWING SET NO. WP–2–386

ADDENDUM NO.1

PLOT DATE: 9/17/20

SAVE DATE: 9/2/20 MUELLER, JOHN K:\PROJECTS\ZONE2\TSUMAS(CHUMASH)CREEK\82323_TSUMAS_CREEK_HUENEME_RD_JANE_DR\DESIGN\DESIGNDRAWINGS\FINAL_PLANS\CROSS_SECTIONS_STA_37+50_TO_41+00.DWG

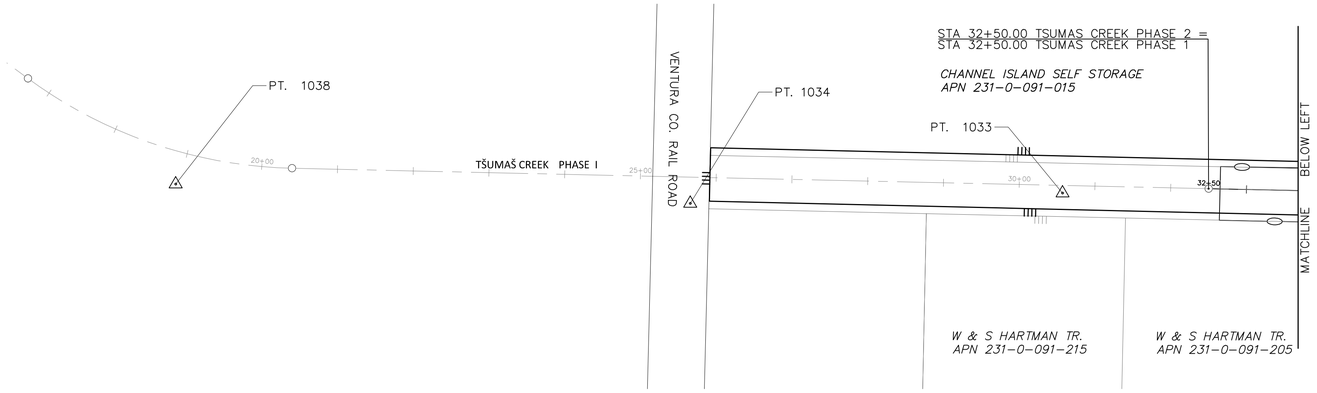

SURVEY CONTROL				
PT NO.	NORTHING	EASTING	ELEVATION	DESCRIPTION
1315	238561.88	1641400.68	11.58	LTT
1316	237823.03	1641353.58	11.70	LTT
1317	239044.16	1641415.71	12.42	LTT
1321	238860.22	1641456.20	7.82	LTT
1323	238403.21	1641460.80	12.03	LTT
1324	237819.56	1641447.20	11.44	MAG & SHINER
1325	237792.03	1641429.52	12.32	LTT

HORIZONTAL DATUM: CCS 27, ZONE V (US FEET)
VERTICAL DATUM: NGVD 29, SCRP 1980 (US FEET)
DATE OF SURVEY: NOVEMBER 2013
FIELD BOOK: VCFB 2013-053

SURVEY CONTROL				
PT NO.	NORTHING	EASTING	ELEVATION	DESCRIPTION
1031	237699.93	1641456.47	12.65	LTT
1033	237330.01	1641417.28	5.73	LTT
1034	236838.58	1641431.00	10.75	1/2" REBAR
1038	236159.47	1641405.49	11.51	1/2" REBAR

HORIZ. DATUM: NAD. 27 (US FT)
VERT. DATUM: NGVD 1929, SCRP 1980 (US FT)
DATE OF SURVEY: SEPTEMBER 2009
FIELD BOOK: VCFB 2009-034

LINE DATA			
TAG NO.	ALIGNMENT	LENGTH	BEARING
L1	TSUMAS CREEK PHASE 2	302.00'	N1°11'17"E
L2	TSUMAS CREEK PHASE 2	748.00'	N1°10'19"E

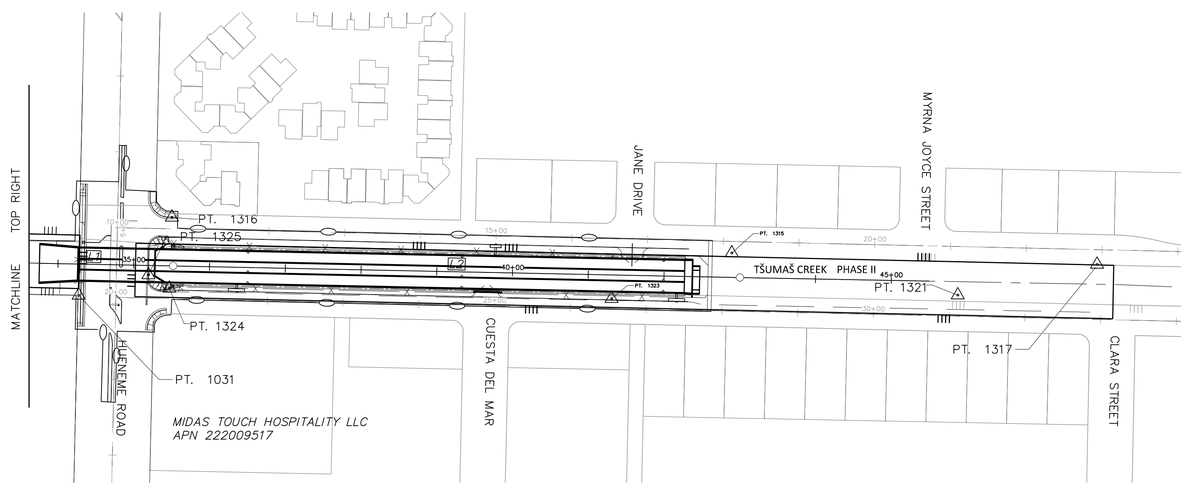

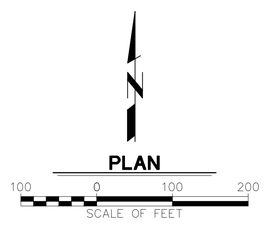

REGISTERED PROFESSIONAL ENGINEER
KIRK R. NORMAN
No. 50367
Exp. 6/30/21
CIVIL
STATE OF CALIFORNIA

PLOT DATE: 8/26/20

SAVE DATE: 8/20/20 DOKTOROV, NATALIYA K:\PROJECTS\ZONE2\TSUMAS(CHUMASH)CREEK\82323_TSUMAS_CREEK_HUENEME_RD_JANE_DR\DESIGN\DESIGNDRAWINGS\FINAL_PLANS\HORIZONTAL_AND_VERTICAL_CONTROL.DWG

D			
C			
B			
A			
△	REVISION DESCRIPTION	APP.	DATE

J M — DESIGNED
J M — DRAWN
K NORMAN — CHECKED

Kirk R. Norman — WATERSHED PROJECT MANAGER — 8/26//2020 DATE
WATERSHED DEPUTY DIRECTOR — DATE
WATERSHED DIRECTOR — DATE

VENTURA COUNTY
PUBLIC WORKS AGENCY
WATERSHED PROTECTION

SPEC. NO. WP21-01
PROJ. NO. 82323

TŠUMAŠ (CHUMASH) CREEK IMPROVEMENTS
HUENEME ROAD TO UPSTREAM OF JANE DRIVE
HORIZONTAL AND VERTICAL CONTROL

SHEET 27 OF 30
DRAWING SET NO. WP-2-386

POLE AND EQUIPMENT SCHEDULE Δ

POLE	STANDARDS					VEH. SIGNAL MTG.		PED. SIG.	P.P.B.		POLE LOC.			H.P.S.V.	MAST ARM MOUNTED INTERNALLY ILLUMINATED	COMMENTS
	YEAR STD.	TYPE	HEIGHT	SIGNAL M.A.	LUMIN. M.A.	MAST ARM	POLE	MTG.	ø	QUAD	E	B	C	Luminare		
Ⓐ	1988	18-2-80 (E)	17'	25'	–	MAS	SV-2-T	–	–	–	EXISTING			–	J STREET	–
ⒶⒶ	*	16-2-100 (T)	18.5'	15'	–	MAS	SV-2-T	–	–	–	AS SHOWN			–	–	–
Ⓑ	1988	1-A (T)	10'	–	–	–	TV-2-T	SP-1-T	4	2	EXISTING			–	–	* 13
Ⓒ	1988	1-A (E)	7'	–	–	–	TV-1-T	SP-1-T	–	–	EXISTING			–	–	–
Ⓓ	1988	PPB-POST (E)	4'-7"	–	–	–	–	–	4/6	2/3	EXISTING			–	–	–
Ⓔ	1988	18-2-80 (E)	17'	25'	–	MAS	SV-1-T	SP-1-T	–	–	EXISTING			–	J STREET	–
Ⓕ	1988	1-A (E)	7'	–	–	–	TV-1-T	TP-1-T	6	1	EXISTING			–	–	–
Ⓖ	1988	1-A (E)	10'	–	–	–	–	TP-1-T	6	4	EXISTING			–	–	–

Δ = EXACT TEMPORARY POLE LOCATIONS DETERMINED BY FIELD ENGINEER. (E)=EXISTING POLE (T)=TEMPORARY POLE

* = CONTRACTOR SHALL INSTALL WEIGHTED BLOCKS AT BASE OF POLES PER DETAIL 'A' AND AS REQUIRED PER POLE TYPE.

SIGN LEGEND:

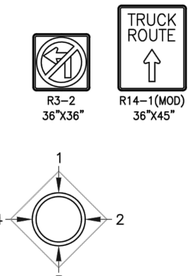

QUADRANT DETAIL
PEDESTRIAN/EQUESTRIAN PUSH BUTTON LOCATION (TOP VIEW)

EXISTING PHASE DIAGRAM

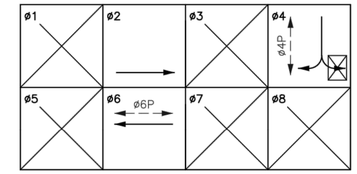

CONDUCTOR SCHEDULE

AWG SIZE OR CABLE TYPE	POLE & CIRCUIT	CONDUIT / CABLE NUMBER (N) 1	(N) 2	(N) 3	(E) 4	(E) 5	(E) 6	(E) 7
12 CONDUCTOR	POLE – ⒶⒶ ø2	– 1	– 1	–	–	–	–	–
	Ⓑ – Ⓖ	–	2	1	–	–	–	–
		–	1	1	–	–	–	–
		–	–	–	–	–	–	–
		–	–	–	–	–	–	–
9 CONDUCTOR	TOTAL	1	2	1	–	–	–	–
#14	TRAFFIC CONDUCTORS	–	–	–	17	13	13	13
#12	IISNS	–	2	–	2	2	–	–
#10	SIGNAL COMMON	–	1	–	1	1	1	1
3-#18	VIDEO POWER & CABLE	1	–	–	–	–	–	–
DETECTION CABLE		–	8	–	5	–	–	–
CONDUIT SIZE		–	2"	2"	3"	2"	2"	2"

* ALL SUSPENDED SIGNAL CABLE SHALL BE AERIAL MOUNTED AT A MIN. HEIGHT OF 17'.

CONSTRUCTION NOTES:

1. EXISTING MODEL 170ATC CONTROLLER ASSEMBLY WITH AUXILIARY EQUIPMENT IN A MODEL 332 CABINET AND ADJACENT TRAFFIC SIGNAL EQUIPMENT ARE TO BE ADJUSTED TO THE PROPOSED GRADE DURING THIS PHASE OF OPERATION.
2. FURNISH AND INSTALL ITERIS VIDEO DETECTION CAMERA (OR APPROVED EQUAL) ON ADJUSTABLE HEIGHT CAMERA BRACKET PER MANUFACTURER'S SPECIFICATIONS.
3. VIDEO DETECTION ZONES SHALL BE MODIFIED TO ACCOMMODATE LANE CONFIGURATION DURING EACH PHASE OF CONSTRUCTION.
4. CONTRACTOR TO VERIFY POLE MOUNTED PEDESTRIAN PUSH BUTTON HEIGHT AND LOCATION MEETS ADA REQUIREMENTS.
5. DEACTIVATE EXISTING DETECTION LOOPS
6. CONTRACTOR SHALL COORDINATE WITH SCE FOR TEMPORARY POINT OF SERVICE.
7. SUPPLY TEMPORARY 170ATC (OR ALLOWED OTHER) CONTROLLER HOUSED INSIDE A TYPE 332 CABINET. MOUNT MINIMUM 10' HIGH CONDUIT TO SIDE OF CABINET TO RUN OVERHEAD CABLING. SUPPLY ALL APPURTENANT EQUIPMENT TO ACHIEVE INTENDED OPERATION.
8. CONTRACTOR IS TO INSTALL NEW PULL BOX TO INTERCEPT EXISTING TRAFFIC SIGNAL CONDUCTORS AND REROUTE, VIA TEMP CONDUCTOR CABLES, TO TEMPORARY CONTROLLER LOCATION.
9. CONTRACTOR IS TO PROVIDE PROPER A.D.A. RAMPING (WITH ASPHALT) OVER TEMPORARY CONDUITS IN AREAS WHERE INTERACTION WITH PEDESTRIANS ARE PREVALENT.
10. CONTRACTOR IS TO EXTEND EXISTING CONDUIT BY INSTALLING ADDITIONAL NEW 3' CONDUIT (IN GROUND) TO PROPOSED PULL BOX LOCATION. EXISTING CONDUCTORS SHALL BE PULLED, BUNDLED AND USED FOR THE PROPER OPERATION OF THE INTERSECTION.
11. CONTRACTOR IS TO EXTEND EXISTING CONDUIT (IN GROUND) FOR PHASE 2 OPERATION AND ULTIMATE DESIGN.
12. CONTRACTOR IS TO INSTALL 2" CONDUIT WITH STUB-OUT AT ULTIMATE POLE LOCATION FOR USE DURING PHASE 2 OPERATION AND ULTIMATE DESIGN.
13. CONTRACTOR IS TO TRANSFER EXISTING POLE TO A TEMPORARY STEEL PLATE PER DETAIL-'A' OF THIS SHEET.

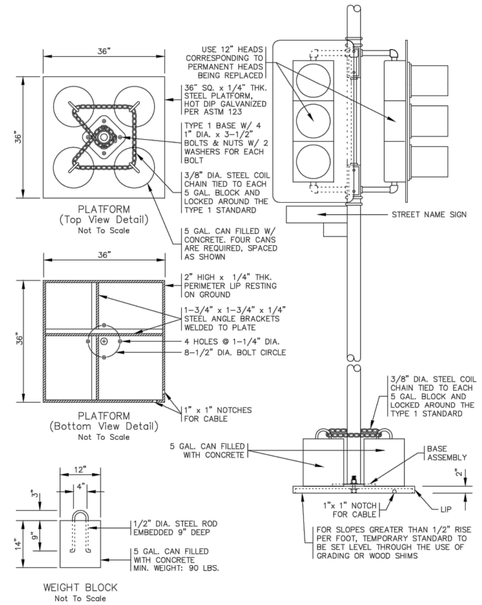

NOTE: FOR TALLER AND MAST ARM POLES, BIGGER PLATES/ADDITIONAL CEMENT BLOCKS WILL BE REQUIRED.

DETAIL 'A'

TEMP. TRAFFIC SIGNAL GENERAL NOTES:

1. CONTRACTOR SHALL PROVIDE APPROPRIATE TEMPORARY INTERSECTION LIGHTING TO THE SATISFACTION OF THE CALTRANS ENGINEER.
2. ALL VEHICLE SIGNAL INDICATIONS SHALL BE 12-INCH AND SHALL BE INSTALLED WITH "LED" SIGNAL MODULES.
3. SIGNAL POLE LOCATIONS ARE APPROXIMATE. LOCATIONS TO BE DETERMINED BY CONSTRUCTION PHASING AND APPROVED BY THE CALTRANS ENGINEER.
4. ALL BACK PLATES SHALL BE LOUVERED.
5. TRAFFIC SIGNAL AND LIGHTING SHALL CONFORM TO THE STATE OF CALIFORNIA STANDARD SPECIFICATIONS SECTION 86 AND STANDARD PLANS FOR SIGNAL POLES (LATEST EDITION).
6. THE CONTRACTOR SHALL NOTIFY CALTRANS REPRESENTATIVE TO SCHEDULE A FIELD REVIEW TO DETERMINE EXACT LOCATION FOR POLES.

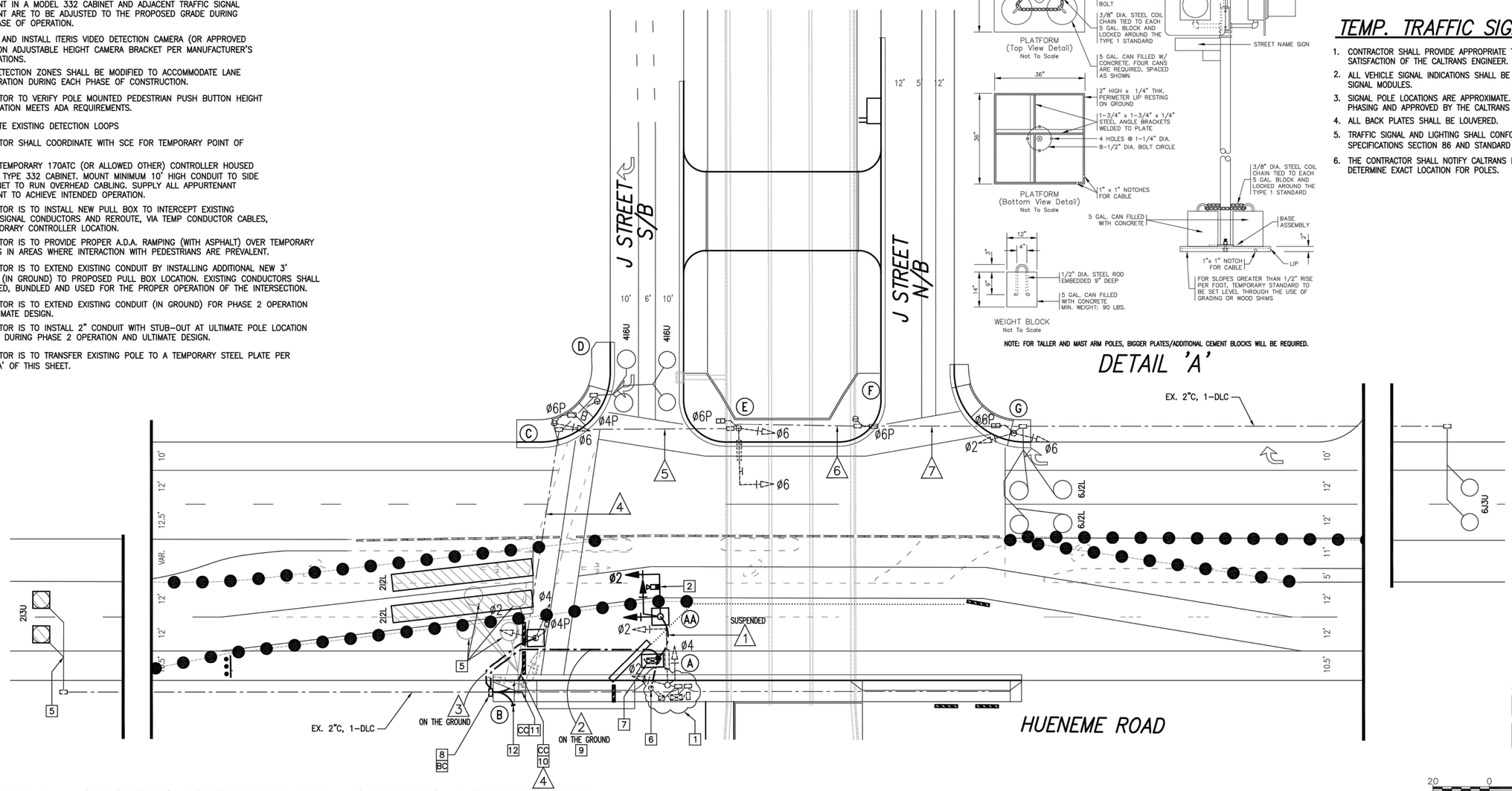

SCALE OF FEET

PLOT DATE: 8/21/20

PLOT DATE: 8/26/20

SAVE DATE: 8/24/20 DOKTOROV, NATALIYA K:\PROJECTS\ZONE2\TSUMAS(CHUMASH)CREEK\82323_TSUMAS_CREEK_HUENEME_RD_JANE_DR\DESIGN\DESIGNDRAWINGS\FINAL_PLANS\28_30_TEMP TRAFFIC CONTROL.DWG

SAVE DATE: 8/21/20 STEVE ZEVALLOS C:\USERS\STEVE ZEVALLOS\DROPBOX (TJW ENGINEERING INC.)\TJW PROJECTS\MNS PROJECTS\MNS-18-004\MNS18004 TEMPORARY TS BLDWG

	REVISION	DESCRIPTION	APP.	DATE
D				
C				
B				
A				
Δ				

TJW ENGINEERING, INC.
Traffic Engineering & Transportation Planning Consultants
6 Venture, Suite 225, Irvine, CA 92618
t: (949) 878-3509 f: (949) 878-3593
www.tjwengineering.com

STEVE ZEVALLOS — DESIGNED
STEVE ZEVALLOS — DRAWN
THOMAS WHEAT — CHECKED

WATERSHED PROJECT MANAGER — DATE 8/26/2020
WATERSHED DEPUTY DIRECTOR — DATE
WATERSHED DIRECTOR — DATE

VENTURA COUNTY PUBLIC WORKS AGENCY WATERSHED PROTECTION

SPEC. NO. WP21-01
PROJ. NO. 82323

TŠUMAŠ (CHUMASH) CREEK IMPROVEMENTS
HUENEME ROAD TO UPSTREAM OF JANE DRIVE
TEMPORARY TRAFFIC SIGNAL PLANS – PHASE 1

SHEET 28 OF 30
DRAWING SET NO. WP-2-386

REGISTERED PROFESSIONAL ENGINEER — THOMAS JOSEPH WHEAT — No. 72040 — Exp. 6/30/22 — CIVIL — STATE OF CALIFORNIA

POLE AND EQUIPMENT SCHEDULE Δ

POLE	STANDARDS					VEH. SIGNAL MTG.		PED. SIG.	P.P.B.		POLE LOC.			H.P.S.V.	MAST ARM MOUNTED INTERNALLY ILLUMINATED	COMMENTS
	YEAR STD.	TYPE	HEIGHT	SIGNAL M.A.	LUMIN. M.A.	MAST ARM	POLE	MTG.	ø	QUAD	E	B	C	Luminare		
A	1988	18-2-80 (E)	17'	25'	–	MAS	SV-2-T	–	–	–	EXISTING			–	J STREET	–
AA	*	16-2-100 (T)	18.5'	15'	–	MAS	SV-2-T	–	–	–	EXISTING			–	–	5
BB	*	16-2-100 (T)	18.5'	–	–	–	–	–	–	–	AS SHOWN			–	–	–
CC	*	16-2-100 (T)	18.5'	–	–	–	–	–	–	–	AS SHOWN			–	–	–
B	1988	1-A (T)	10'	–	–	–	TV-2-T	SP-1-T	4	2	EXISTING			–	–	*
C	1988	1-A (E)	7'	–	–	–	TV-1-T	SP-1-T	–	–	EXISTING			–	–	–
D	1988	PPB-POST (E)	4'-7"	–	–	–	–	–	4/6	2/3	EXISTING			–	–	–
E	1988	18-2-80 (E)	17'	25'	–	MAS	SV-1-T	SP-1-T	–	–	EXISTING			–	J STREET	–
F	1988	1-A (E)	7'	–	–	–	TV-1-T	TP-1-T	6	1	EXISTING			–	–	–
G	1988	1-A (E)	10'	–	–	–	–	TP-1-T	6	4	EXISTING			–	–	–

Δ = EXACT TEMPORARY POLE LOCATIONS DETERMINED BY FIELD ENGINEER. (E)=EXISTING POLE (T)=TEMPORARY POLE

* = CONTRACTOR SHALL INSTALL WEIGHTED BLOCKS AT BASE OF POLES PER DETAIL 'A' AND AS REQUIRED PER POLE TYPE.

SIGN LEGEND:

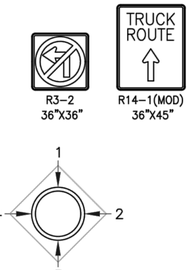

QUADRANT DETAIL
PEDESTRIAN/EQUESTRIAN PUSH BUTTON LOCATION (TOP VIEW)

EXISTING PHASE DIAGRAM

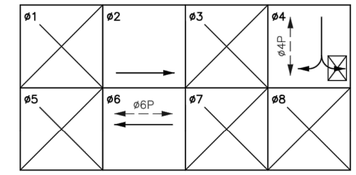

CONDUCTOR SCHEDULE

AWG SIZE OR CABLE TYPE	POLE & CIRCUIT	CONDUIT / CABLE NUMBER (N) 1	(N) 2	(N) 3	(E) 4	(N) 5	(E) 6	(E) 7	(E) 8	(E) 9
12 CONDUCTOR	POLE - AA	–	–	–	–	–	–	–	–	–
	BB	–	–	–	–	–	–	–	–	–
	CC	–	–	–	–	–	–	–	–	–
9 CONDUCTOR	B	–	–	–	–	1	–	–	–	–
	TOTAL	–	–	–	–	1	–	–	–	–
#14	TRAFFIC CONDUCTORS	–	–	–	20	–	17	13	13	13
#12	IISNS	–	–	–	2	–	2	2	–	–
#10	SIGNAL COMMON	–	–	–	1	–	1	1	1	1
3-#18	VIDEO POWER & CABLE	1	2	2	–	–	–	–	–	–
DETECTION CABLE		–	–	–	8	–	5	–	–	–
CONDUIT SIZE		–	–	–	3"	2"	3"	2"	2"	2"

* ALL SUSPENDED SIGNAL CABLE SHALL BE AERIAL MOUNTED AT A MIN. HEIGHT OF 17'.

CONSTRUCTION NOTES:

1. EXISTING MODEL 170ATC CONTROLLER ASSEMBLY AND AUXILIARY EQUIPMENT IN A MODEL 332 CABINET. MOUNT MINIMUM 10' HIGH CONDUIT TO SIDE OF CABINET TO RUN OVERHEAD CABLING. SUPPLY ALL APPURTENANT EQUIPMENT TO ACHIEVE INTENDED OPERATION.
2. FURNISH AND INSTALL ITERIS VIDEO DETECTION CAMERA (OR APPROVED EQUAL) ON ADJUSTABLE HEIGHT CAMERA BRACKET PER MANUFACTURER'S SPECIFICATIONS.
3. VIDEO DETECTION ZONES SHALL BE MODIFIED TO ACCOMMODATE LANE CONFIGURATION DURING EACH PHASE OF CONSTRUCTION.
4. CONTRACTOR TO VERIFY POLE MOUNTED PEDESTRIAN PUSH BUTTON HEIGHT AND LOCATION MEETS ADA REQUIREMENTS.
5. REMOVE TEMP SIGNAL POLE.
6. DEACTIVATE EXISTING DETECTION LOOPS

TEMP. TRAFFIC SIGNAL GENERAL NOTES:

1. CONTRACTOR SHALL PROVIDE APPROPRIATE TEMPORARY INTERSECTION LIGHTING TO THE SATISFACTION OF THE CALTRANS ENGINEER.
2. ALL VEHICLE SIGNAL INDICATIONS SHALL BE 12-INCH AND SHALL BE INSTALLED WITH "LED" SIGNAL MODULES.
3. SIGNAL POLE LOCATIONS ARE APPROXIMATE. LOCATIONS TO BE DETERMINED BY CONSTRUCTION PHASING AND APPROVED BY THE CALTRANS ENGINEER.
4. ALL BACK PLATES SHALL BE LOUVERED.
5. TRAFFIC SIGNAL AND LIGHTING SHALL CONFORM TO THE STATE OF CALIFORNIA STANDARD SPECIFICATIONS SECTION 86 AND STANDARD PLANS FOR SIGNAL POLES (LATEST EDITION).
6. THE CONTRACTOR SHALL NOTIFY CALTRANS REPRESENTATIVE TO SCHEDULE A FIELD REVIEW TO DETERMINE EXACT LOCATION FOR POLES.

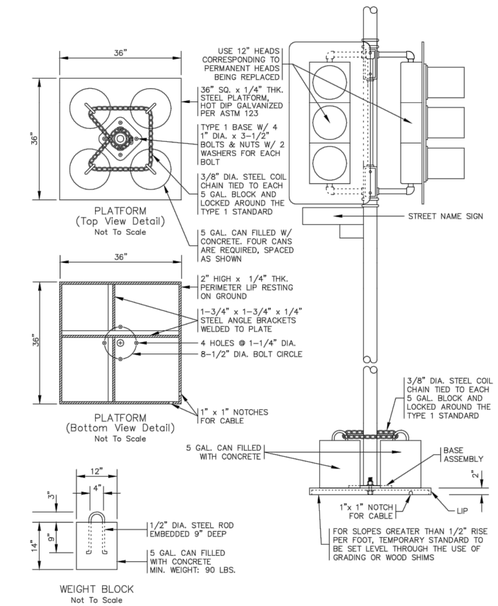

NOTE: FOR TALLER AND MAST ARM POLES, BIGGER PLATES/ADDITIONAL CEMENT BLOCKS WILL BE REQUIRED.

DETAIL 'A'

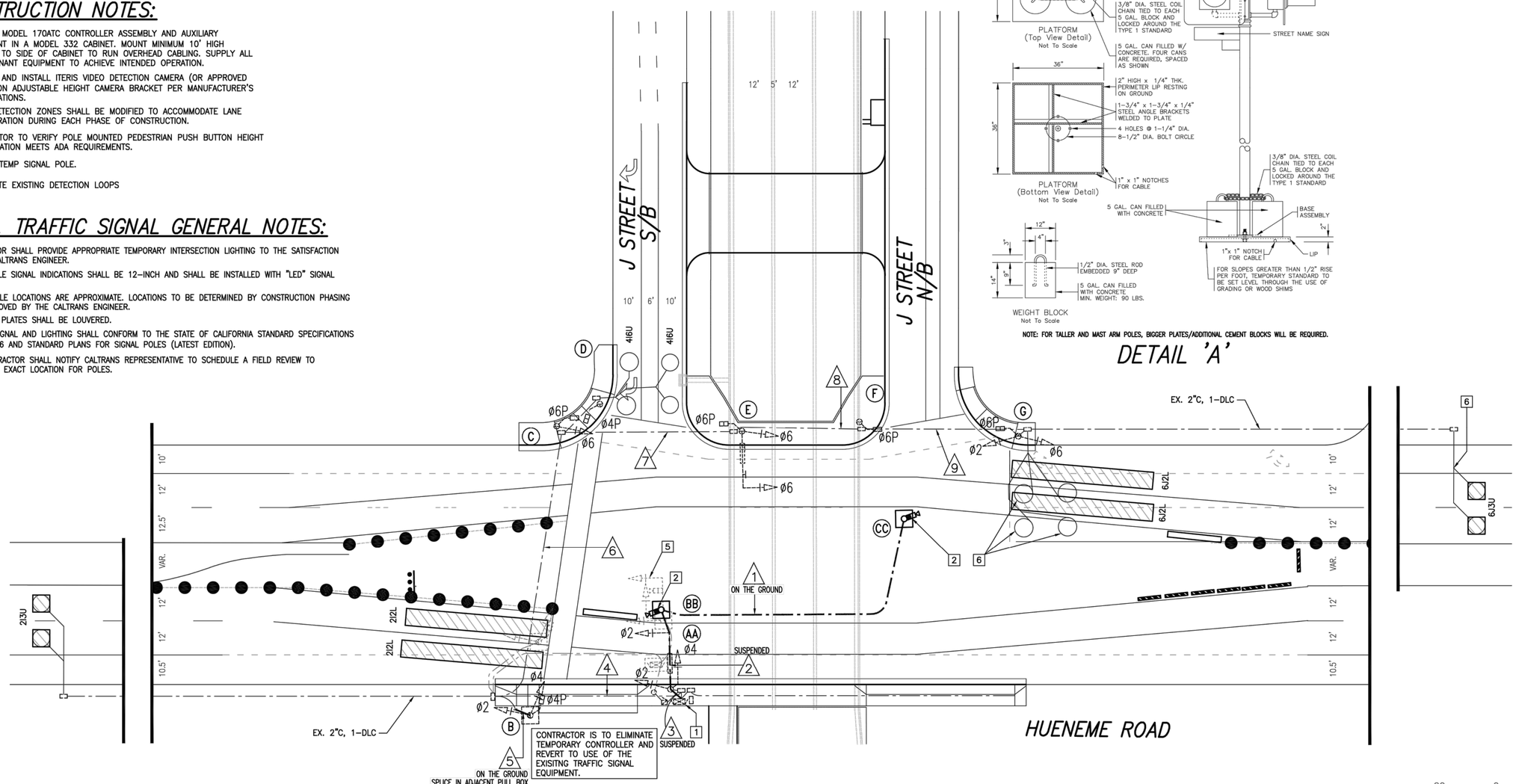

SCALE OF FEET: 20 0 20 40

PLOT DATE: 8/21/20

SAVE DATE: 8/24/20 DOKTOROV, NATALIYA K:\PROJECTS\ZONE2\TSUMAS(CHUMASH)CREEK\82323_TSUMAS_CREEK_HUENEME_RD_JANE_DR\DESIGN\DESIGNDRAWINGS\FINAL_PLANS\28_30_TEMP TRAFFIC CONTROL.DWG

SAVE DATE: 8/21/20 STEVE ZEVALLOS C:\USERS\STEVE ZEVALLOS\DROPBOX (TJW ENGINEERING INC.)\TJW PROJECTS\MNS PROJECTS\MNS-18-004\MNS18004 TEMPORARY TS BLD.DWG

	REVISION	DESCRIPTION	APP.	DATE
D				
C				
B				
A				
Δ				

TJW ENGINEERING, INC.
Traffic Engineering & Transportation Planning Consultants
6 Venture, Suite 225, Irvine, CA 92618
t: (949) 878-3509 f: (949) 878-3593
www.tjwengineering.com

STEVE ZEVALLOS — DESIGNED
STEVE ZEVALLOS — DRAWN
THOMAS WHEAT — CHECKED

WATERSHED PROJECT MANAGER — DATE 8/26//2020
WATERSHED DEPUTY DIRECTOR — DATE
WATERSHED DIRECTOR — DATE

VENTURA COUNTY
PUBLIC WORKS AGENCY
WATERSHED PROTECTION

SPEC. NO. WP21-01
PROJ. NO. 82323

TŠUMAŠ (CHUMASH) CREEK IMPROVEMENTS
HUENEME ROAD TO UPSTREAM OF JANE DRIVE
TEMPORARY TRAFFIC SIGNAL PLANS – PHASE 2

SHEET 29 OF 30
DRAWING SET NO. WP-2-386

REGISTERED PROFESSIONAL ENGINEER — THOMAS JOSEPH WHEAT — No. 50487 — Exp. 6/30/22 — CIVIL — STATE OF CALIFORNIA

POLE AND EQUIPMENT SCHEDULE Δ

POLE	STANDARDS					VEH. SIGNAL MTG.		PED. SIG.	P.P.B.		POLE LOC.			H.P.S.V.	MAST ARM MOUNTED INTERNALLY ILLUMINATED	COMMENTS
	YEAR STD.	TYPE	HEIGHT	SIGNAL M.A.	LUMIN. M.A.	MAST ARM	POLE	MTG.	ø	QUAD	E	B	C	Luminare		
Ⓐ	1988	18-2-80 (E)	17'	25'	–	MAS	SV-2-T	–	–	–	EXISTING			–	J STREET	–
ⒶⒶ	*	16-2-100 (T)	18.5'	15'	–	–	–	–	–	–	EXISTING			–	–	5
ⒷⒷ	*	16-2-100 (T)	18.5'	–	–	MAS	SV-1-T	–	–	–	AS SHOWN			–	–	–
ⒸⒸ	*	16-2-100 (T)	18.5'	–	–	–	–	–	–	–	AS SHOWN			–	–	–
ⒹⒹ	*	16-2-100 (T)	18.5'	–	–	–	–	–	–	–	AS SHOWN			–	–	–
Ⓑ	1988	1-A (T)	10'	–	–	–	TV-2-T	SP-1-T	4	2	EXISTING			–	–	–
Ⓒ	1988	1-A (E)	7'	–	–	–	TV-1-T	SP-1-T	–	–	EXISTING			–	–	–
Ⓓ	1988	PPB-POST (E)	4'-7"	–	–	–	–	–	4/6	2/3	EXISTING			–	–	–
Ⓔ	1988	18-2-80 (E)	17'	25'	–	MAS	SV-1-T	SP-1-T	–	–	EXISTING			–	J STREET	–
Ⓕ	1988	1-A (E)	7'	–	–	–	TV-1-T	TP-1-T	6	1	EXISTING			–	–	–
Ⓖ	1988	1-A (E)	10'	–	–	–	–	TP-1-T	6	4	EXISTING			–	–	–

Δ = EXACT TEMPORARY POLE LOCATIONS DETERMINED BY FIELD ENGINEER. (E)=EXISTING POLE (T)=TEMPORARY POLE

* = CONTRACTOR SHALL INSTALL WEIGHTED BLOCKS AT BASE OF POLES PER DETAIL 'A' AND AS REQUIRED PER POLE TYPE.

SIGN LEGEND:

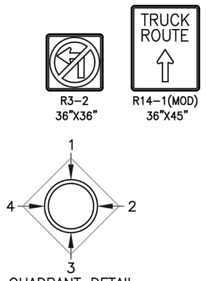

QUADRANT DETAIL
PEDESTRIAN/EQUESTRIAN PUSH BUTTON LOCATION (TOP VIEW)

EXISTING PHASE DIAGRAM

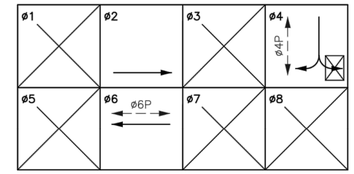

CONDUCTOR SCHEDULE

AWG SIZE OR CABLE TYPE	POLE & CIRCUIT	CONDUIT / CABLE NUMBER (N) 1	(N) 2	(N) 3	(E) 4	(N) 5	(E) 6	(E) 7	(E) 8	(E) 9
12 CONDUCTOR / 9 CONDUCTOR	POLE – Ⓐ	– / –	– / –	– / –	– / –	– / –	– / –	– / –	– / –	– / –
	ⒷⒷ	– / –	– / –	– / –	– / –	– / –	– / –	– / –	– / –	– / –
	ⒸⒸ	– / –	– / –	– / –	– / –	– / –	– / –	– / –	– / –	– / –
	Ⓑ	– / –	– / –	– / –	– / –	– / 1	– / –	– / –	– / –	– / –
	TOTAL	– / –	– / –	– / –	– / –	– / 1	– / –	– / –	– / –	– / –
#14	TRAFFIC CONDUCTORS	–	–	–	20	–	17	13	13	13
#12	IISNS	–	–	–	2	–	2	2	–	–
#10	SIGNAL COMMON	–	–	–	1	–	1	1	1	1
3-#18	VIDEO POWER & CABLE	1	1	1	–	–	–	–	–	–
DETECTION CABLE		1	1	1	–	–	–	–	–	–
CONDUIT SIZE		–	–	–	3"	2"	3"	2"	2"	2"

* ALL SUSPENDED SIGNAL CABLE SHALL BE AERIAL MOUNTED AT A MIN. HEIGHT OF 17'.

CONSTRUCTION NOTES:

1. EXISTING MODEL 170ATC CONTROLLER ASSEMBLY AND AUXILIARY EQUIPMENT IN A MODEL 332 CABINET. MOUNT MINIMUM 10' HIGH CONDUIT TO SIDE OF CABINET TO RUN OVERHEAD CABLING. SUPPLY ALL APPURTENANT EQUIPMENT TO ACHIEVE INTENDED OPERATION.
2. FURNISH AND INSTALL ITERIS VIDEO DETECTION CAMERA (OR APPROVED EQUAL) ON ADJUSTABLE HEIGHT CAMERA BRACKET PER MANUFACTURER'S SPECIFICATIONS.
3. VIDEO DETECTION ZONES SHALL BE MODIFIED TO ACCOMMODATE LANE CONFIGURATION DURING EACH PHASE OF CONSTRUCTION.
4. CONTRACTOR TO VERIFY POLE MOUNTED PEDESTRIAN PUSH BUTTON HEIGHT AND LOCATION MEETS ADA REQUIREMENTS.
5. REMOVE/RELOCATE TEMP SIGNAL POLE.
6. REACTIVATE EXISTING DETECTION LOOPS

TEMP. TRAFFIC SIGNAL GENERAL NOTES:

1. CONTRACTOR SHALL PROVIDE APPROPRIATE TEMPORARY INTERSECTION LIGHTING TO THE SATISFACTION OF THE CALTRANS ENGINEER.
2. ALL VEHICLE SIGNAL INDICATIONS SHALL BE 12-INCH AND SHALL BE INSTALLED WITH "LED" SIGNAL MODULES.
3. SIGNAL POLE LOCATIONS ARE APPROXIMATE. LOCATIONS TO BE DETERMINED BY CONSTRUCTION PHASING AND APPROVED BY THE CALTRANS ENGINEER.
4. ALL BACK PLATES SHALL BE LOUVERED.
5. TRAFFIC SIGNAL AND LIGHTING SHALL CONFORM TO THE STATE OF CALIFORNIA STANDARD SPECIFICATIONS SECTION 86 AND STANDARD PLANS FOR SIGNAL POLES (LATEST EDITION).
6. THE CONTRACTOR SHALL NOTIFY CALTRANS REPRESENTATIVE TO SCHEDULE A FIELD REVIEW TO DETERMINE EXACT LOCATION FOR POLES.

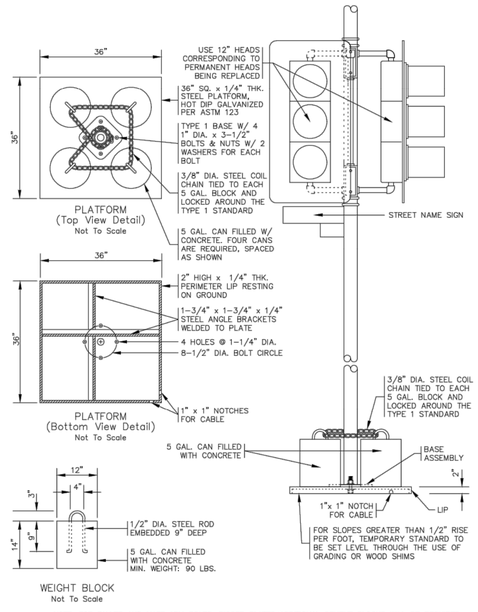

NOTE: FOR TALLER AND MAST ARM POLES, BIGGER PLATES/ADDITIONAL CEMENT BLOCKS WILL BE REQUIRED.

DETAIL 'A'

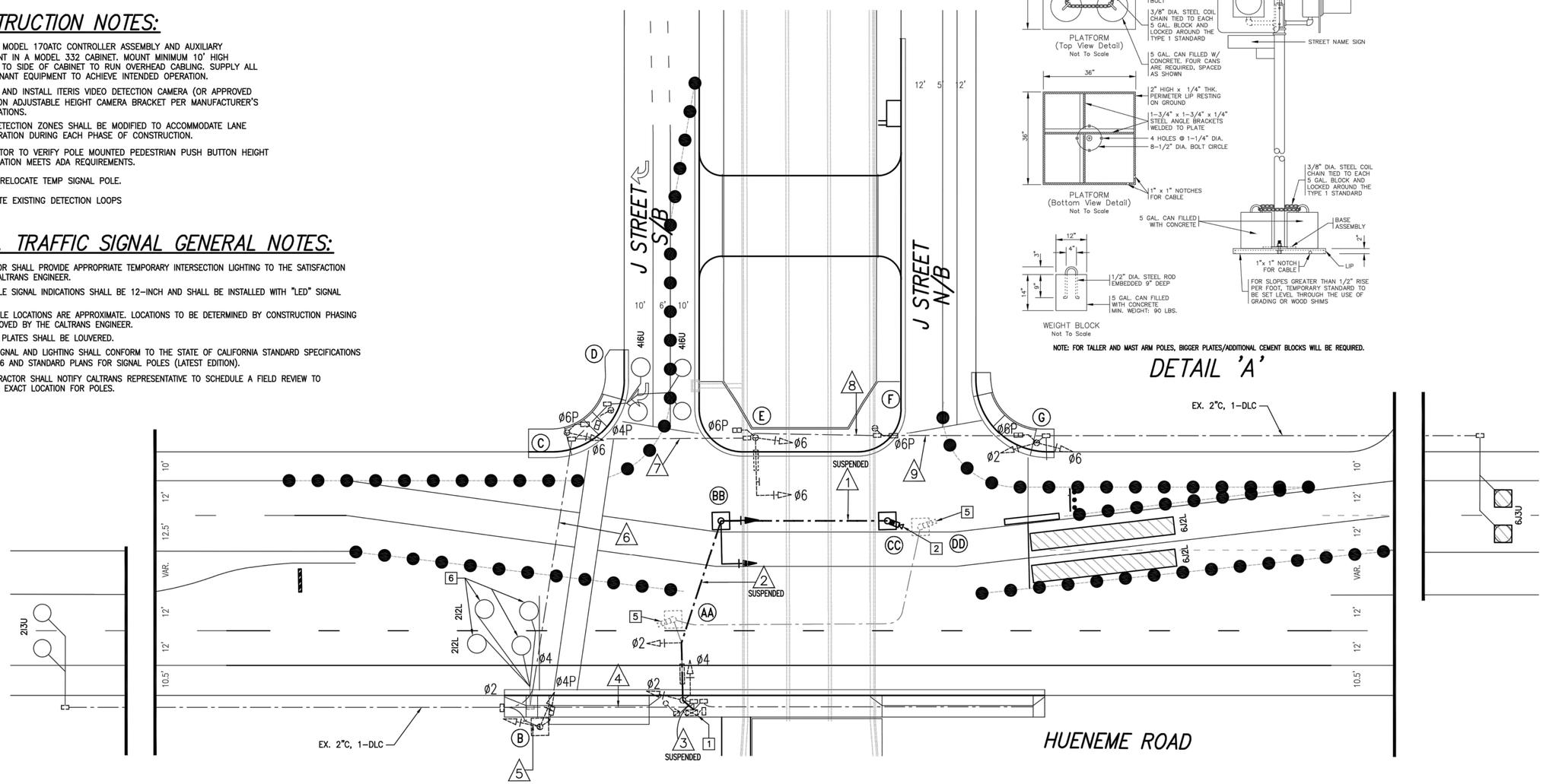

SCALE OF FEET 20 0 20 40

REGISTERED PROFESSIONAL ENGINEER THOMAS JOSEPH WHEAT No. 62467 Exp. 6/30/22 CIVIL STATE OF CALIFORNIA

PLOT DATE: 8/21/20

PLOT DATE: 8/26/20

SAVE DATE: 8/24/20 DOKTOROV, NATALIYA K:\PROJECTS\ZONE2\TSUMAS(CHUMASH)CREEK\82323_TSUMAS_CREEK_HUENEME_RD_JANE_DR\DESIGN\DESIGNDRAWINGS\FINAL_PLANS\28_30_TEMP TRAFFIC CONTROL.DWG

SAVE DATE: 8/21/20 STEVE ZEVALLOS C:\USERS\STEVE ZEVALLOS\DROPBOX (TJW ENGINEERING INC.)\TJW PROJECTS\MNS PROJECTS\MNS-18-004\MNS18004 TEMPORARY TS BL.DWG

	REVISION	DESCRIPTION	APP.	DATE
D				
C				
B				
A				
Δ				

TJW ENGINEERING, INC.
Traffic Engineering & Transportation Planning Consultants
6 Venture, Suite 225, Irvine, CA 92618
t: (949) 878-3509 f: (949) 878-3593
www.tjwengineering.com

STEVE ZEVALLOS — DESIGNED
STEVE ZEVALLOS — DRAWN
THOMAS WHEAT — CHECKED

WATERSHED PROJECT MANAGER — DATE 8/26/2020
WATERSHED DEPUTY DIRECTOR — DATE
WATERSHED DIRECTOR — DATE

VENTURA COUNTY
PUBLIC WORKS AGENCY
WATERSHED PROTECTION

SPEC. NO. WP21-01
PROJ. NO. 82323

TŠUMAŠ (CHUMASH) CREEK IMPROVEMENTS
HUENEME ROAD TO UPSTREAM OF JANE DRIVE
TEMPORARY TRAFFIC SIGNAL PLANS – PHASE 3

SHEET 30 OF 30
DRAWING SET NO. WP-2-386